PLATES MUST BE ARRANGED ALTERNATELY LEFT AND RIGHT. FOR CONVENIENCE ON THIS DRAWING, WHERE BLOCKS OF R AND LAA PLATES OCCUR, THE TOTAL NUMBER OF EACH IS GIVEN.

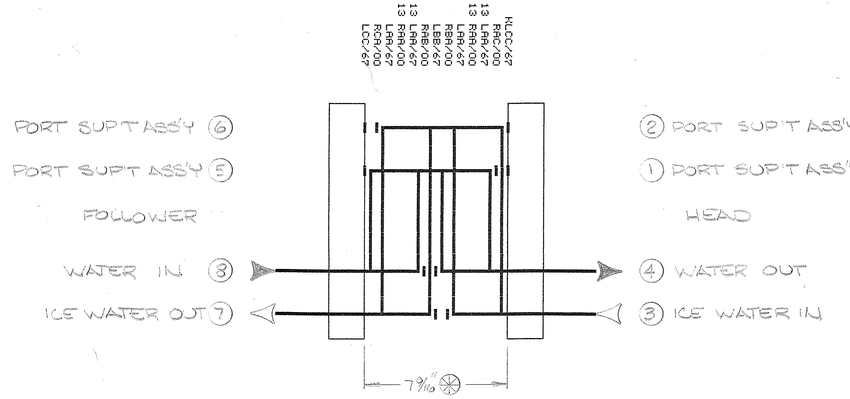

PASSES

WATER	2 OF 15
ICE WATER	2 OF 15

PLATES SHOWN BELOW ILLUSTRATE SR2 PLATE STYLES

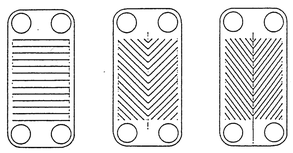

ELEVATION OF PLATE ARRANGEMENT

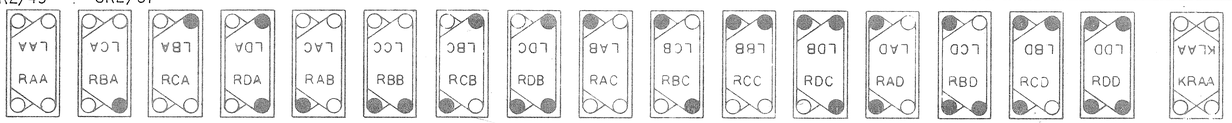

PLATE SYMBOLS

END PLATE

DIMENSIONAL TOLERANCE
FRAME BALL FEET LOCATIONS ±1/4" [6]
NOZZLE CENTER LINE & FACE DIMENSIONS ±1/8" [3]

THIS UNIT IS EQUIPPED WITH STAINLESS STEEL TIE BARS. CLEAN AND LUBRICATE THREADS BEFORE OPENING OR CLOSING. YOU MUST USE A LUBRICANT COMPATIBLE WITH STAINLESS STEEL:

ROCOL A.S.P. OR NEVER-SEEZ BLACK MOLY LUBE DO NOT USE COMMON GREASE.

NOTES:

1. ALL PLATES VIEWED FROM GASKET SIDE
2. END PLATES DENOTED BY LETTER "K" PRECEDING SYMBOL
3. ⊛ THIS MODEL HEAT EXCHANGER IS DESIGNED TO OPERATE WITH METAL TO METAL CONTACT BETWEEN PLATE SURFACES. ALL SUPPORT IS FROM PLATE CROSS OVER POINTS AND NOT FROM GASKET SEAL. THEREFORE THIS MACHINE MUST ALWAYS BE TIGHTENED TO A DEAD HARD CONDITION BEFORE OPERATION. THE PLATAGE DIM. SHOWN IS NOMINAL ONLY. DUE TO PLATE MFG. TOLERANCES PLATAGE CAN VARY ±0.005" PER PLATE
4. ALL DIMENSIONS ARE IN INCHES. DIMENSIONS IN BRACKETS [ ] ARE IN MILLIMETERS
5. INSTALL PLATES ALTERNATING LEFT AND RIGHT.
6. CUSTOMER'S PIPING TO FOLLOWER OR CONNECTOR GRID NOZZLES MUST ALLOW FOR FREE MOVEMENT WHEN UNIT IS OPENED FOR SERVICE AND PROVIDE FOR VARIATION OF THE TIGHTENED PLATAGE DIM. ⊛ OF ± 1/2" PER 100 PLATES.

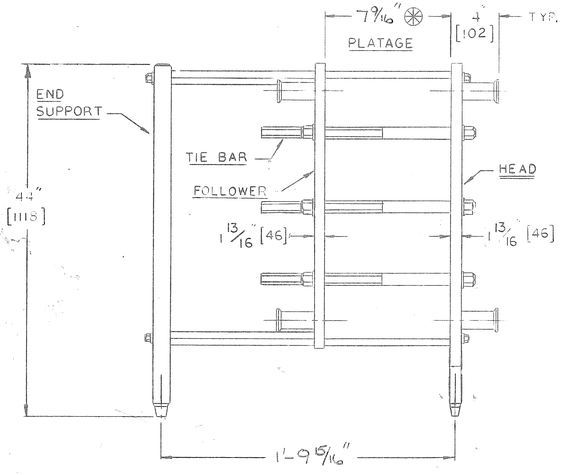

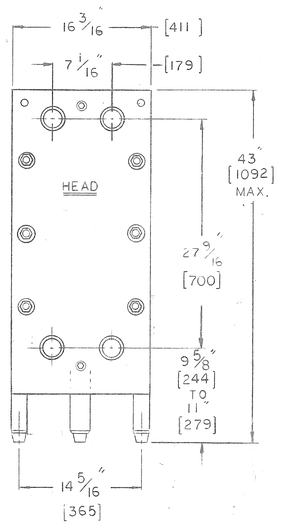

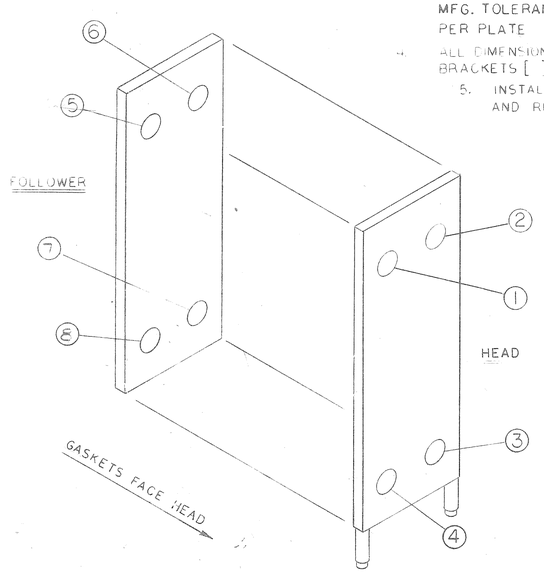

DUTY	LIQUID	RATE	TEMP. °F.	ΔP(PSI)
	WATER	35 GPM.	75° → 36°	3
	ICE WATER	105 GPM.	34° → 47°	20

LIST OF PLATES 61 SR2 .6MM, 316SS W/PARACRIL CLIP GASKETS

TOTAL "L" PLATES 31	TOTAL "R" PLATES 30
28 LAA/67	26 RAA/00
1 LBB/67	1 RAB/00
1 LCC/67	1 RAC/00
1 KLCC/67	1 RBA/00
	1 RCA/00

FRAME SIZE: #2
MAX. OPERATING PRESSURE: 150 PSI.
⊛ PLATAGE: 7 9/16 INCHES
VOL. OF PRODUCT: 3.6 GALS.
WT. OF MACHINE DRY: 850 LBS.
WT. OF MACHINE FLOODED: 910 LBS.
FITTINGS: 2½" 304 SS TRI-CLAMP

MODEL SR250S HEAT EXCHANGER

W.O. 24918

TAG. P.O.# 006003

	DATE	REVISION
E		
D		
C		
B		
A		

APV EQUIPMENT INC
395 FILLMORE AVE
TONAWANDA, NY 14150

TITLE: FAIRMONT PRODUCTS BELLEVILLE, PA.

DR. BY	W.O.	DATE	DRAWING NO.	REV.
EKS	24918	AUG. 17 1991	4.24918.0001	
CK. BY	SCALE	SUPERCEDES		
	NTS			