LAMBDA PHYSIK®

Subsidiary of COHERENT®

USER MANUAL

LPX*Pro*™ Series

U.S.A.
Lambda Physik USA, Inc.
3201 West Commerical Blvd.
Ft. Lauderdale, FL 33309, USA

Tel.: +1 (954) 486-1500
1 (8 00) EXCIMER
Fax: +1 (954) 486-1501
eMail: salesusa@lambdaphysik.com

GERMANY
Lambda Physik AG
Hans-Böckler-Strasse 12
D - 37079 Göttingen, Germany

Tel.: +49 (551) 6938-0
Fax: +49 (551) 68691
eMail: salesgermany@lambdaphysik.com

JAPAN
Lambda Physik Co. Ltd.
German Industry Center
1-18-2 Hakusan, Midori-ku
Yokohama 226-0006, Japan

Tel.: +81 (45) 939-7848
Fax: +81 (45) 939-7849
eMail:
asiasales@lambdaphysik.com

Marubun Corp.
Marubun Daiya Bldg.
8-1, Nihonbashi Odenmacho
Chuo-ku, Tokyo 103-8577, Japan

Tel.: +81 (3) 3639-9811
Fax: +81 (3) 3662-1349

Internet: http://www.lambdaphysik.com

CONTENTS

1 INTRODUCTION

2 FUNDAMENTALS

3 SAFETY

4 SPECIFICATIONS, REQUIREMENTS AND ACCESSORIES

5 INSTALLATION

6 OPERATION

7 MAINTENANCE

8 CONTROL SOFTWARE

9 TROUBLESHOOTING

10 GLOSSARY

LIST OF FIGURES

INDEX

TABLE OF CONTENTS

1 INTRODUCTION 1

1.1 About this Manual 1

1.1.1 Intended Audience 1

1.1.2 Numbering of Chapters, Pages and Instructions . 2

1.1.3 Typographic Conventions. 2

1.1.4 Trademarks 3

1.2 Safety 3

1.2.1 Laser Safety Classification 3

1.2.2 Safety Information 3

1.2.3 Signal Words and Symbols 4

1.2.3.1 Signal Words. 4

1.2.3.2 Symbols. 5

1.3 Laser Terminology According to ISO 11145. 6

1.4 Conversion Tables 7

1.4.1 Measurements 7

1.4.2 Temperatures 7

1.4.3 Calcium Hardness 8

1.5 Feedback Regarding Documentation 8

2 FUNDAMENTALS 9

2.1 The Excimer Laser Device 9

2.2 Functional Description of the Laser 10

2.3 System Overview. 12

2.3.1 Laser Head. 13

2.3.2 Handheld Keypad. 18

2.3.3 Optional Halogen Source 18

A0409LPX

2.4 Primary System Components 19
2.4.1 Laser Tube 19
2.4.2 Resonator Optics 21
2.4.3 Energy Monitor 21
2.4.4 High Voltage Circuit 22
2.4.4.1 HV Power Supply 23
2.4.4.2 Thyratron 23
2.4.5 Laser Control System 24
2.4.6 Electrical System 25
2.4.7 Gas Supply / Exhaust System 25
2.4.8 Cooling Water System 29
2.4.9 Purge Gas System 30
2.5 Monitoring and Fail-Safety Systems 30
2.5.1 Watchdogs 30
2.5.2 Data Ring Selftest 30
2.5.3 Interlocks 31
2.5.4 External Interlock and Laser Warning Lamp . . . 31
2.6 Pulse Triggering Modes 31
2.7 Energy Management 32
2.7.1 Fundamental Running Modes 32
2.7.2 Constant Energy Operation With Gas Actions . . 33
2.7.2.1 Halogen Injections 33
2.7.2.2 Partial Gas Replacements 34
2.7.3 Constant Energy Operation Without Gas Actions 35
2.8 Operating Modes 35
2.8.1 OFF Mode 36
2.8.2 OFF, WAIT Mode 36
2.8.3 ON Mode 36
2.8.4 NEW FILL Mode 36
2.8.5 HI/PGR Mode 37
2.9 Laser Operation 37

A0409LPX

3 SAFETY 39

3.1 General Safety Aspects 39

3.1.1 Applicable Standards 39

3.1.2 Basic Operation and Designated Use 40

3.1.3 Organizational Measures 41

3.1.4 Selection and Qualification of Personnel - Basic Responsibilities 42

3.1.5 Safety Instructions Governing Specific Operational Phases 42

3.2 Specific Safety Aspects 44

3.2.1 Physical Hazards 45

3.2.1.1 Ultra-Violet Light 45

3.2.1.2 High Voltage / Electric Energy. 46

3.2.1.3 Halogen Gas 47

3.2.1.4 Ozone 48

3.2.2 Personnel Safety 48

3.2.2.1 Ultra-violet Radiation Safety 48

3.2.2.2 Electrical Safety. 52

3.2.2.3 Gas Safety. 53

3.2.2.4 Pressure Vessel Safety 55

3.2.3 Constructive Safety Features 55

3.2.3.1 Radiation Safety Features. 55

3.2.3.2 Electrical Safety Features 57

3.2.3.3 Pressure and Gas Handling Safety Features . 58

3.2.3.4 Fire Safety Features 59

3.2.3.5 Mechanical Safety Features 59

3.2.3.6 General Safety Features 60

3.3 Labels 61

3.3.1 Laser Head 62

3.3.2 HV Power Supply 65

4 SPECIFICATIONS, REQUIREMENTS AND ACCESSORIES 67

4.1 Laser Beam Parameters 68

4.1.1 LPX*Pro* 200 Series 68

4.1.2 LPX*Pro* 300 Series 69

A0409LPX

4.2 Physical Dimensions 70
4.2.1 Laser Head 70
4.2.2 HV Power Supply Module 71
4.2.3 Vacuum Pump 71
4.3 Gases 72
4.4 Power Supply 75
4.5 Cooling Water 76
4.6 Air Intake / Exhaust 77
4.7 Signal Lines 78
4.7.1 External Interlock and Warning Lamp 78
4.7.2 Serial Interface (RS232C) 79
4.7.3 External Trigger In 80
4.7.4 Sync. Out Signal 80
4.8 Connections and Space Requirements 81
4.8.1 Beam Exit Position 81
4.8.2 Foot Configuration 82
4.8.3 Gas Connections 83
4.8.3.1 Pressure Regulators 84
4.8.3.2 Gas Cabinets 84
4.8.4 Cooling Water Connections 84
4.8.5 Electrical and Signal Line Connections 85
4.8.6 Air Intake and Exhaust Connections 86
4.8.7 Maintenance Area 87
4.9 Environmental Conditions 88
4.9.1 Transport and Storage 88
4.9.2 Operation 88

5 INSTALLATION 89

5.1 Site Preparation 89
5.2 Transport Locks 90
5.3 Water Line Installation 90

A0409LPX

5.4 Electrical Line Installation 92
5.4.1 Connecting the HV Power Supply Module 93
5.4.2 Connecting the Vacuum Pump. 97
5.4.3 Connecting the Handheld Keypad 98
5.4.4 Connecting External Circuits 99
5.4.5 Connection to the Mains Power Supply 101
5.5 Exhaust Line Installation 102
5.5.1 Connecting the Housing Exhaust Line 103
5.5.2 Connecting the Laser Tube Exhaust Line 104
5.6 Gas Line Installation 106

6 OPERATION 111

6.1 Operating and Display Elements 112
6.1.1 Operating Panel 112
6.1.1.1 Main Switch / Emergency Off 113
6.1.1.2 LINE ON Light 113
6.1.1.3 Key Switch. 113
6.1.2 Laser Radiation Warning Lamp 114
6.1.3 Handheld Keypad 114
6.1.3.1 Display. 116
6.1.3.2 Numerical Input Keys 117
6.1.3.3 Cursor Keys. 117
6.1.3.4 ENTER Key 117
6.1.3.5 EXE Key 117
6.1.3.6 BREAK Key 117
6.1.3.7 RUN STOP Key. 118
6.1.3.8 TRIGGER INT EXT Key 118
6.1.3.9 MODE Key 119
6.1.3.10 REPRATE / HV / EGY Keys 119
6.1.3.11 COUNTS Keys 120
6.1.3.12 MENU Keys. 120
6.1.3.13 EGY CAL Key 120
6.1.3.14 Function Keys 121
6.1.3.15 GAS Keys 122

A0409LPX

6.2 Routine Operating Sequences 123
6.2.1 Check Beam Path 123
6.2.2 Turn On Gases 124
6.2.3 Start-Up Laser Device 128
6.2.4 Start Laser Operation 130
6.2.5 Stop Laser Operation 132
6.2.6 Shut-Down Laser Device 133
6.2.7 Turn Off Gases 134
6.3 Operating Modes and Parameters 135
6.3.1 Change Trigger Mode 135
6.3.2 Change Repetition Rate 136
6.3.3 Change Running Mode 137
6.3.4 Change Beam Output Energy Value 138
6.3.5 Change Charging Voltage 139
6.4 Gas Menu 140
6.4.1 Select and Change Gas Menu 140
6.4.2 Reset Gas Menu to Factory Settings 141
6.5 Pulse Counters 142
6.5.1 Read Total Counter 142
6.5.2 Read User Counter 143
6.5.3 Reset User Counter 143
6.6 Emergency Functions 144
6.6.1 Emergency Off 144
6.6.2 Emergency Fill with Inert Gas 145

7 MAINTENANCE 147

7.1 Laser Logbook 147
7.2 Maintenance Schedule 148
7.3 Preparatory Procedures 149
7.3.1 Lockout / Tagout 149
7.3.2 Handling Housing Covers 153
7.3.2.1 Front and Rear Service Panels 153
7.3.2.2 Side, Front, Rear and Top Covers 154

A0409LPX

7.4 Gas System Maintenance 155
7.4.1 Flush Gas Line 155
7.4.2 Purge Gas Line 156
7.4.3 Exchange Halogen Gas Cylinder 158
7.4.4 Exchange Rare, Buffer or Inert Gas Cylinder . . 163
7.5 Laser Tube Maintenance 168
7.5.1 New Fill. 168
7.5.2 Manual Halogen Injection. 170
7.5.3 Purge Laser Tube. 171
7.5.4 Re-Passivate Laser Tube. 173
7.6 Laser Optics Maintenance 175
7.6.1 Exchange Premounted Tube Windows 176
7.6.2 Clean / Replace Tube Windows 182
7.6.3 Exchange Premounted Mirrors. 187
7.6.4 Exchange Mirrors 191
7.7 Energy Monitor Maintenance 193
7.7.1 Calibrate Energy Monitor 193
7.7.2 Remove / Insert Beam Splitter 195
7.7.3 Cleaning the Beam Splitter. 199
7.8 Laser Resonator Alignment 201
7.9 Thyratron Maintenance. 205
7.10 Halogen Filter Maintenance 209
7.10.1 Check Halogen Filter Filling Ratio 209
7.10.2 Exchange Halogen Filter Cartridge 210
7.11 Preparation for Transport / Storage. 213
7.11.1 Transportation Fill 214
7.11.2 Disconnect Gas Lines 215

8 CONTROL SOFTWARE 217

8.1 Communication Syntax. 217
8.2 Reply Codes. 220

A0409LPX

8.3 Operating Modes 221
8.3.1 Overview of Operating Modes 221
8.3.2 Operating Mode Setting Restrictions 222
8.3.3 Description of Operating Modes 223
8.3.3.1 OFF 223
8.3.3.2 ON 224
8.3.3.3 SKIP 225
8.3.3.4 NEW FILL 225
8.3.3.5 PASSIVATION FILL 226
8.3.3.6 PURGE RESERVOIR 226
8.3.3.7 SAFETY FILL 227
8.3.3.8 TRANSPORT FILL 227
8.3.3.9 FLUSHING 228
8.3.3.10 CONT 228
8.3.3.11 HI 229
8.3.3.12 PGR 229
8.3.3.13 MANUAL FILL INERT 229
8.3.3.14 FLUSH <XY> LINE 230
8.3.3.15 PURGE <XY> LINE 230
8.3.3.16 CAPACITY RESET 231
8.3.3.17 LL OFF 231
8.3.3.18 ENERGY CAL 232
8.3.4 Status Codes 234
8.4 Laser Parameter Commands 236
8.4.1 Overview of Laser Parameters 236
8.4.2 Operating Mode Setting Restrictions 238
8.4.3 Parameter Polling Restrictions 238
8.4.4 Running Modes and Operating Parameters . . . 239
8.4.4.1 MODE 239
8.4.4.2 EGY and EGY SET 239
8.4.4.3 EGY RANGE 240
8.4.4.4 HV 241
8.4.4.5 TRIGGER 241
8.4.4.6 REPRATE 242
8.4.4.7 COUNTS 243
8.4.5 Gas System and Gas Supply 243
8.4.5.1 GAS MODE 243
8.4.5.2 HALOGEN, RARE, BUFFER and INERT . . . 244
8.4.5.3 MENU 245

A0409LPX

8.4.6 Pulse and Time Counters 246
8.4.6.1 TOTALCOUNTER 246
8.4.6.2 COUNTER 246
8.4.6.3 TIMEOUT 247
8.4.7 System Status and Maintenance 248
8.4.7.1 COD 248
8.4.7.2 FILTER 249
8.4.7.3 FILTER CONTAMINATION 249
8.4.7.4 INTERLOCK 250
8.4.7.5 POWER STABILIZATION ACHIEVED 250
8.4.7.6 PRESSURE 251
8.4.7.7 PULSE DIFF 251
8.4.7.8 RESERVOIR TEMP 252
8.4.7.9 TEMP CONTROL 252
8.4.8 Halogen Source 253
8.4.8.1 ACCU 253
8.4.8.2 CAP.SET and CAP.LEFT 253
8.4.8.3 LEAKRATE 254
8.4.8.4 TEMP 254
8.4.8.5 ROOMTEMP 255
8.4.9 General Information 255
8.4.9.1 TYPE OF LASER 255
8.4.9.2 VERSION 255

9 TROUBLESHOOTING 257

9.1 Warnings and Error Messages 258
9.1.1 Duty Cycle Exceeded (ON:03) 259
9.1.2 Energy Cal. Error (OFF:7) 259
9.1.3 Error Temperature Measurement (OFF:12) . . . 260
9.1.4 Fatal Error, COM-Datalink (-) 260
9.1.5 Fatal Error, LWL-Datalink (OFF:5) 260
9.1.6 Fatal Error, Watchdog (OFF:4) 263
9.1.7 Fluorine Valve Not Opened (OFF:13; ON:13) . 263
9.1.8 Halogen Pressure Too High (OFF:33) 263
9.1.9 HI in Prep (ON:34) 263
9.1.10 Inert Valve Closed (OFF:39) 264
9.1.11 Interlock XXX (OFF:1) 264

A0409LPX

9.1.12 Leak!-Check Windows (FLUSHING LEAKTEST CONT:30) 264
9.1.13 Low Light (OFF:26) 265
9.1.14 Low Pressure (OFF:10; ON:10) 265
9.1.15 New Gas Fill Needed (OFF:8; ON:8) 265
9.1.16 No Capacity Left (OFF:11) 266
9.1.17 No Gas Flow (XX:3) 266
9.1.18 No Vacuum (OFF:9) 267
9.1.19 No Vacuum (ON:9) 268
9.1.20 Not Available (OFF:35) 268
9.1.21 OFF:41 (OFF:41) 268
9.1.22 ON:40 (ON:40) 268
9.1.23 ON:41 (ON:41) 269
9.1.24 Polling (OFF:6) 269
9.1.25 Preset Energy too High (OFF:2; ON:2) 269
9.1.26 RAM Check Error (OFF:29) 270
9.1.27 Timeout (OFF:31) 270
9.1.28 Warm-up 8min (OFF:21) 271
9.1.29 Wrong Pressure (OFF:27) 271
9.2 Interlocks 272
9.2.1 Overload 272
9.2.2 Remote 273
9.2.3 Temp.Res 273
9.2.4 Ventilation 274
9.3 Self-Firing 275
9.4 No Trigger Signal 275
9.5 Corrosion in Gas System 276
9.6 Laser Device Does Not Start 277
9.7 Beam Energy Too Low 278
9.8 Low Light 283
9.9 Fuses 288
9.9.1 Laser Head Fuses 288
9.9.2 HV Power Supply Module Fuses 289

A0409LPX

10 GLOSSARY 291

LIST OF FIGURES 299

INDEX 303

A0409LPX

1 INTRODUCTION

This chapter describes the contents of this manual as well as the conventions, safety information and units used in this manual.

1.1 About this Manual

This instruction manual is intended to familiarize the user with the LPX*Pro*™ Series excimer laser device and its designated use.

The instruction manual contains important information on how to operate and routinely maintain the LPX*Pro* laser device safely, properly and most efficiently. Observing these instructions helps to avoid danger, reduce repair costs and downtimes and increase the reliability and lifetime of the LPX*Pro*.

The instruction manual must always be available wherever the LPX*Pro* is in use.

The instruction manual must be read and applied by any person in charge of carrying out work with and on the LPX*Pro*, such as:

- operation including setting up, troubleshooting in the course of work, removal of production waste, care and disposal of consumables,
- service (maintenance, inspection, repair) and/or
- transport.

The instruction manual is to be supplemented by the respective national rules and regulations for accident prevention and environmental protection.

1.1.1 Intended Audience

This manual is intended for:

- Operators, who have completed the Basic Operations course for LPX*Pro* laser devices. We define an operator as someone who operates the LPX*Pro* in normal day-to-day operations.
- Process engineers, who have completed the Advanced Operations course for LPX*Pro* laser devices. We define a process engineer as someone who prepares jobs for production and other purposes and monitors production quantity and quality.
- Any reader who wishes to acquire general knowledge of the LPX*Pro* laser device.

A0409LPX

1.1.2 Numbering of Chapters, Pages and Instructions

The pages of this manual are numbered continuously. The page number appears in the lower outside corner of every page.

The chapters are numbered continuously. The name of the chapter appears in the upper outside corner of every even page.

Each chapter ends with an even page number. Consequently, certain even pages at the ends of chapters will be intentionally left blank.

Each step within a procedure is sequentially numbered.

1.1.3 Typographic Conventions

Menu commands, enquiries and prompts are written in uppercase letters enclosed by quotation marks.

– Example: “ARE YOU SURE (Y/N) ?”

Single keys to be pressed are written in angled brackets.

– Example: Press <Y> to confirm and continue.

The key description <ENTER> is used to describe the key marked or referred to as ENTER, ↵, RETURN, CR or CARRIAGE RETURN.

A plus sign between two keys means that the two keys are to be pressed simultaneously.

– Example: Press <CTRL> + <Q> to select “QUIT”.

Commands to be typed into the keyboard are written in non-proportional lower-case letters.

– Example: Type `cd lambda`.

Programming commands of the remote software to be used literally are written in upper-case letters.

– Example: OPMODE=

Descriptions in commands or messages that are not to be used literally are written in italic letters.

– Example: OPMODE=*operating mode*
  A permitted command is to be used instead of the words operating mode.

Examples are written in non-proportional, upper-case letters to simulate the appearance of computer monitor displays or printer output.

A0409LPX

1.1.4 Trademarks

LAMBDA PHYSIK, the Lambda Physik logo, LPX, HaloSafe, MSC, NovaTube, SlideValve and Super MSC are registered trademarks of Lambda Physik AG.

LPXPro and the LPXPro logo are trademarks of Lambda Physik AG.

Gyrolok is a registered trademark of Hoke Inc., NJ (USA).

VCR is a registered trademark of Cajon Company (USA).

SERTO is a registered trademark of Gressel AG (CH).

Swagelok is a registered trademark of Swagelok Company (USA).

1.2 Safety

1.2.1 Laser Safety Classification

Lasers and laser systems are classified according to their relative hazards. These classifications are found in the American National Standards for the Safe Use of Lasers (ANSI Z 136.1-1986), FDA 21 CFR 1040.10 and 1040.11 and IEC-825.
Within this classification, the LPX*Pro*™ Series excimer laser is a class IV (high power) laser. It must be regarded as a potential hazard to the human operator. When connected to a correspondingly configured beam guidance system, the LPX*Pro* becomes a class I laser device.
The laser beam must also be regarded as a potential fire hazard.

1.2.2 Safety Information

Chapter 3 (Safety) describes the physical hazards related to the laser device, the means of protection against these hazards and the safety features incorporated in the design of the laser device.

The Safety chapter must be read by all persons entrusted with any sort of work on the LPX*Pro* laser device.

Never start to follow the procedures detailed in this manual unless you have read and fully understood the information given in the Safety chapter.

A0409LPX

1.2.3 Signal Words and Symbols

The LPX*Pro* documentation may contain sections in which particular hazards are defined or special attention is drawn to particular conditions. These sections are indicated with signal words in accordance with ANSI Z-535.2-1991 and safety symbols (pictorial hazard alerts) in accordance with ANSI Z535.3-1991.

1.2.3.1 Signal Words

Four signal words are used in the LPX*Pro* documentation: DANGER, WARNING, CAUTION and NOTE.

The signal words DANGER**,** WARNING and CAUTION designate the degree or level of hazard:

DANGER
Indicates an imminently hazardous situation which, if not avoided, will result in death or serious injury.

WARNING
Indicates a potentially hazardous situation which, if not avoided, could result in death or serious injury.

CAUTION
Indicates a potentially hazardous situation which, if not avoided, may result in minor or moderate injury. It is also used to alert against unsafe practices that may result in property damage.

Use of the signal word "***NOTE"***:

NOTE
Used to define sections, where particular attention should be paid to ensure efficient operation or servicing of the laser device.

A0409LPX

1.2.3.2 Symbols

The signal words **DANGER**, **WARNING**, and **CAUTION** are always emphasized with a safety symbol that indicates a special hazard, regardless of the hazard level:

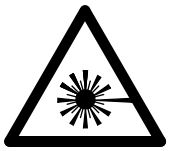

This symbol is combined with one of the signal words **DANGER**, **WARNING** or **CAUTION** to indicate a hazardous situation caused by **laser radiation**.

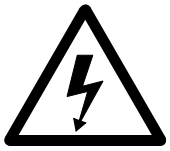

This symbol is combined with one of the signal words **DANGER**, **WARNING** or **CAUTION** to indicate a hazardous situation caused by **electricity**.



This symbol is combined with one of the signal words **DANGER**, **WARNING** or **CAUTION** to indicate a hazardous situation caused by **hot surface(s)**.



This symbol is combined with one of the signal words **DANGER**, **WARNING** or **CAUTION** to indicate a hazardous situation caused by **flammable substances**.



This symbol is combined with one of the signal words **DANGER**, **WARNING** or **CAUTION** to indicate a hazardous situation caused by **toxic substances**.



This symbol is combined with one of the signal words **DANGER**, **WARNING** or **CAUTION** to indicate a hazardous situation caused by circumstances other than those described above.

A0409LPX

1.3 Laser Terminology According to ISO 11145

ISO 11145 (“Optics and Optical Instruments - Lasers and Laser Related Equipment - Vocabulary and Symbols”) contains a list of laser terminology.

To prevent misunderstandings, this manual strictly differentiates between “laser” and “laser device” (see Figure 1). Thus “start laser device” means that the power is off and shall be turned on. To “start the laser” means to switch on the laser beam and start lasing..

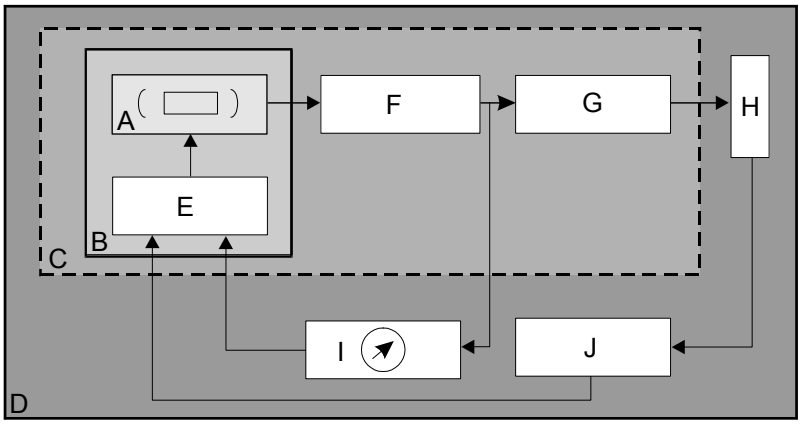

Figure 1: *Laser components according to ISO 11145*

Definitions:

A Laser
Consists of an amplifying medium capable of emitting coherent radiation with wavelengths up to 1 mm by means of stimulated emission.

B Laser Device
A laser (A), where the radiation is generated, together with essential additional facilities (E) that are necessary to operate the laser (e.g. cooling, power and gas supply) .

C Laser Assembly
Laser device (B) together with specific, normally optical, mechanical and/or electrical system components for beam handling and forming (F: e.g. mirrors, lenses; G: e.g. telescope, focussing).

D Laser Unit
One ore more laser assemblies (C) together with measurement and control systems (I) and handling systems (J: robotics, workpiece positioning).

H Workpiece

A0409LPX

1.4 Conversion Tables

1.4.1 Measurements

Listed below are the units of measure used in this manual and their equivalents according to the SI standard:

1 meter (m)	=	39.37 inches (in)
1 meter (m)	=	3.28 feet (ft)
1 centimeter (cm)	=	0.3937 inch (in)
1 square meter (m^2)	=	1550 square inches (in^2)
1 square meter (m^2)	=	10.76 square feet (ft^2)
1 cubic meter (m^3)	=	35.31 cubic feet (ft^3)
1 liter (l)	=	0.264 US gallons (gal)
1 kilogram (kg)	=	2.20 US pounds (lbs)
1 bar	=	100,000 Pascal (Pa)
100,000 Pascal (Pa)	=	14.50 pounds force per square inch (lbf/in^2)

1.4.2 Temperatures

The temperatures in this manual are primarily indicated in degrees celsius (° C).

To convert °C to °F; multiply by 9, divide by 5 and add 32.

To convert °F to °C; subtract 32, multiply by 5, divide by 9.

As a guide, we have converted below some temperature values from °C to °F:

-10 °C	=	14 °F
0 °C	=	32 °F
5 °C	=	41 °F
20 °C	=	68 °F
38 °C	=	100 °F
100 °C	=	212 °F

A0409LPX

1.4.3 Calcium Hardness

The Calcium Hardness of the cooling water is indicated in milliequivalent/kg (mval/kg) or calcium equivalent of the compound. It is differentiated between ppm (American Hardness), °d (German Hardness), °f (French Hardness) and °e (English Hardness). In this manual the hardness is indicated in ppm. For conversion see below.

	mval/kg	ppm	°d	°f	°e
1 mval/kg	1.0	50.0	2.8	5.0	3.5
1 ppm	0.02	1.0	0.056	0.1	0.07
1 °d	0.357	17.9	1.0	1.79	1.25
1 °f	0.2	10.0	0.56	1.0	0.7
1 °e	0.286	14.3	0.8	1.43	1.0

1.5 Feedback Regarding Documentation

If you have any comments regarding the documentation provided to you, please contact us.

When you contact us, please provide us with

– The document code

– The date of issue

– The page number, section number and, where applicable, the procedure step number

– A description of any errors

– A proposal for improvements

Feedback Address

E-mail	documentation@lambdaphysik.com
Post	Lambda Physik AG Documentation Comments Hans-Böckler-Straße 12 D-37079 Göttingen Germany
Telefax	+49 551 68691

A0409LPX

2 FUNDAMENTALS

This chapter briefly describes the most important features, functions, and subassemblies of the laser device. This background information will ease your understanding of the information contained in the subsequent chapters.

The information in this chapter does not enable you to operate or service the LPX*Pro* excimer laser device.

Never switch on or attempt to operate or service the LPX*Pro* laser device before reading, understanding and fully familiarizing yourself with Chapter 3 of this manual (Safety)!

NOTE
This chapter does not cover topics such as laser physics, optics required for the operation of lasers or the principle of excimer lasers. These subjects are described in detail in the Lambda Physik publication “Excimer Laser Technology: laser sources, optics, systems and applications” (ISBN 3-00-006395-1, available through Lambda Physik).

2.1 The Excimer Laser Device

The LPX*Pro*™ Series of excimer laser devices belong to the category of gas lasers. The term “excimer” is an abbreviation for “*excit*ed di*mer*”, which is a reminder of the excited diatomic molecules that were originally used as a laser gas in the first systems.

Depending on the required laser output wavelength, the active laser medium used by the LPX*Pro* is either Xenon Fluoride (XeF), Xenon Chloride (XeCl), Krypton Fluoride (KrF) or Argon Fluoride (ArF). XeF, XeCl, KrF and ArF are excited rare gas halogen molecules, i.e. they are of the type typically used in modern excimer lasers. All of these types of lasers operate in the pulsed mode and emit ultra-violet laser radiation. XeF lasers operate at a wavelength of 351 nm, XeCl lasers operate at a wavelength of 308 nm, KrF lasers operate at a wavelength of 248 nm and ArF lasers operate at a wavelength of 193 mm. The required wavelength has to be specified when the laser device is ordered.

The repetition rate, i.e. the frequency at which the laser pulses are fired, is variable up to a predetermined version-dependent maximum.

A0409LPX

2.2 Functional Description of the Laser

For laser light to be emitted, three basic components are needed:

– an active laser medium capable of emitting laser light,

– an optical resonator for the amplification of the laser light,

– an energy source to stimulate the emission of laser light.

The active laser medium (see Figure 2, A) is the laser gas which is contained in the laser tube. The electrons in this laser-active medium are pumped, or energized, to an excited state by an energy source (B). In a process known as *stimulated emission*, they are “stimulated” by external photons to emit the stored energy in the form of photons. The photons thus emitted travel in step with the stimulating photons and, in turn, impinge on other excited atoms to release more photons.

The optical resonator normally consists of two mirrors (C and D) which are placed on two sides of the active laser medium. *Light amplification* is achieved as the photons move back and forth between the two mirrors, triggering further stimulated emissions. A part of the intense, directional, and monochromatic laser light finally leaves the resonator through one of the mirrors (D), which is only partially reflective. LPX*Pro* laser devices have these two mirrors attached to the rear and front side of the laser tube.

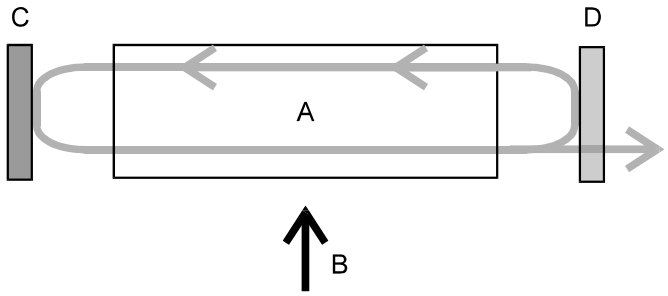

Figure 2: *Laser principle*

Key to Figure 2:

A	Active laser medium	C	Rear mirror
B	Energy source	D	Front mirror

To stimulate the active lasing medium for emission of laser light, an electrical discharge is used. The amount of energy needed for the electrical discharge requires high voltages. Therefore LPX*Pro* laser devices are equipped with a high voltage power supply.

LPX*Pro* laser devices are designed to emit laser light in pulses. The electrical energy for each laser pulse is stored in an array of capacitors, which are supplied by the high voltage power supply. When a laser pulse is needed, an electronic switch, technically realized by a thyratron, enables the capacitors to be discharged. The electrical energy stored in the capacitors is then transferred to the

A0409LPX

laser-active medium via an electrical discharge between a set of electrodes in the laser tube, and thus stimulates the laser pulse. For the control of the laser beam energy LPX*Pro* laser devices are equipped with an energy monitor.

The internal control of the components in LPX*Pro* laser devices is achieved by an integral laser control device which is known as the communication interface (CI). The laser control system is described in Section 2.4.5 on page 24.

The fundamental functional design of the LPX*Pro* is shown in Figure 3.

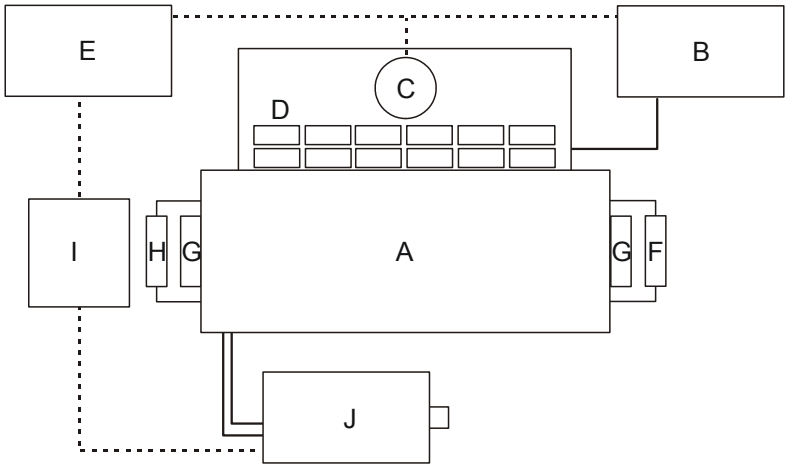

Figure 3: *Functional design of the LPX*Pro* laser device*

Key to Figure 3:

A Laser tube
B High voltage power supply
C Thyratron
D Capacitor array
E Communication interface
F Output coupler (partially reflective mirror)
G Cavity windows
H Rear mirror (highly reflective)
I Energy monitor
J Vacuum pump

A0409LPX

2.3 System Overview

The LPX*Pro* laser device is physically subdivided into the modules shown in Figure 4.

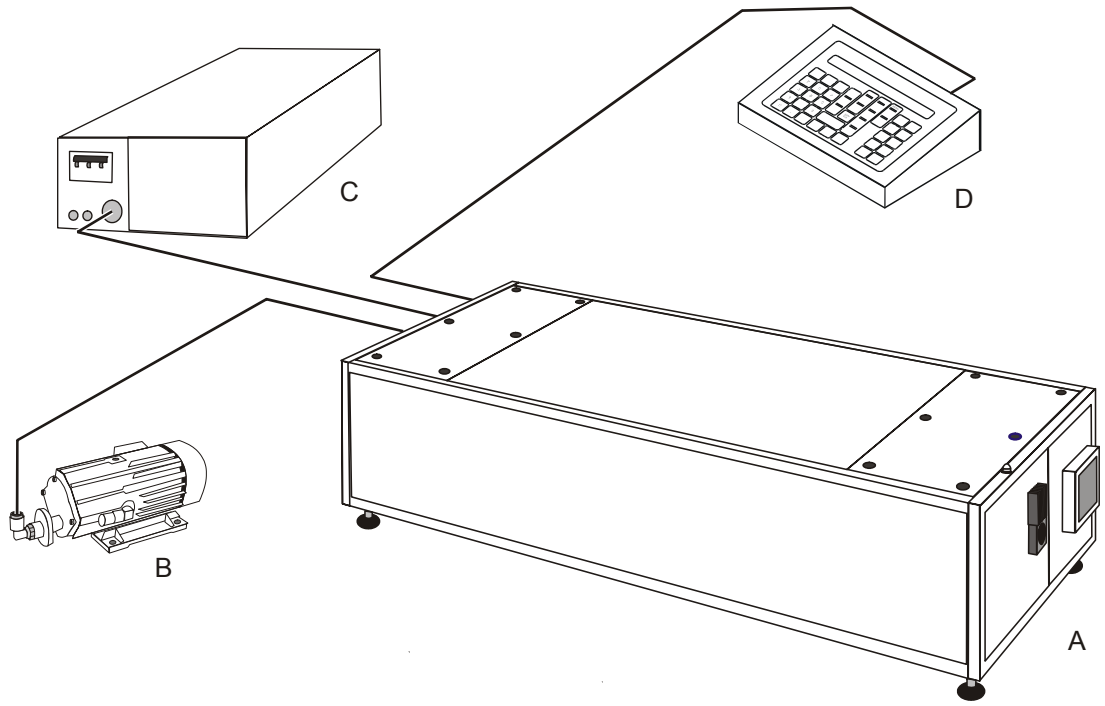

Figure 4: *Principal Modules of the LPX*Pro* laser device*

Key to Figure 4:

A Laser head
B Vacuum pump
C HV power supply
D Handheld keypad

The *laser head* contains the components and systems that generate and emit the laser beam. An overview of the laser head and is provided in Section 2.3.1.

The *vacuum pump* enables evacuation of the gas system (e.g. for a new gas fill).

The *HV power supply* module transforms mains voltage into the high voltage required for the high voltage discharge. The high voltage circuit is described in section Section 2.4.4.

The purpose of the *handheld keypad* is described in Section 2.3.2.

A0409LPX

2.3.1 Laser Head

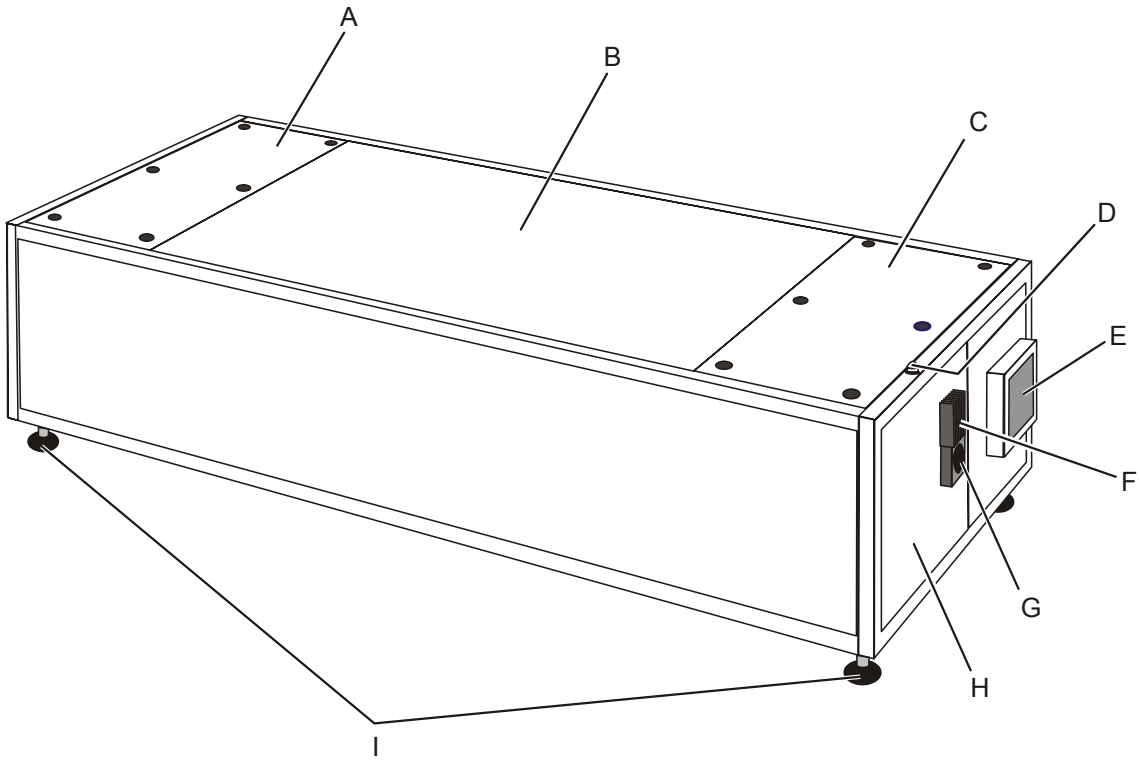

Figure 5: *View of front, right-hand side and top of laser head*

Key to Figure 5:

A	Rear service panel (rear optics, CI, gas handling module)
B	Top cover (laser tube, discharge unit, thyratron supply unit)
C	Front service panel (front optics, energy monitor)
D	Laser ON warning light
E	Air intake
F	Beam shutter (open position)
G	Front beam exit aperture
H	Front shutter panel
I	Height-adjustable feet

A0409LPX

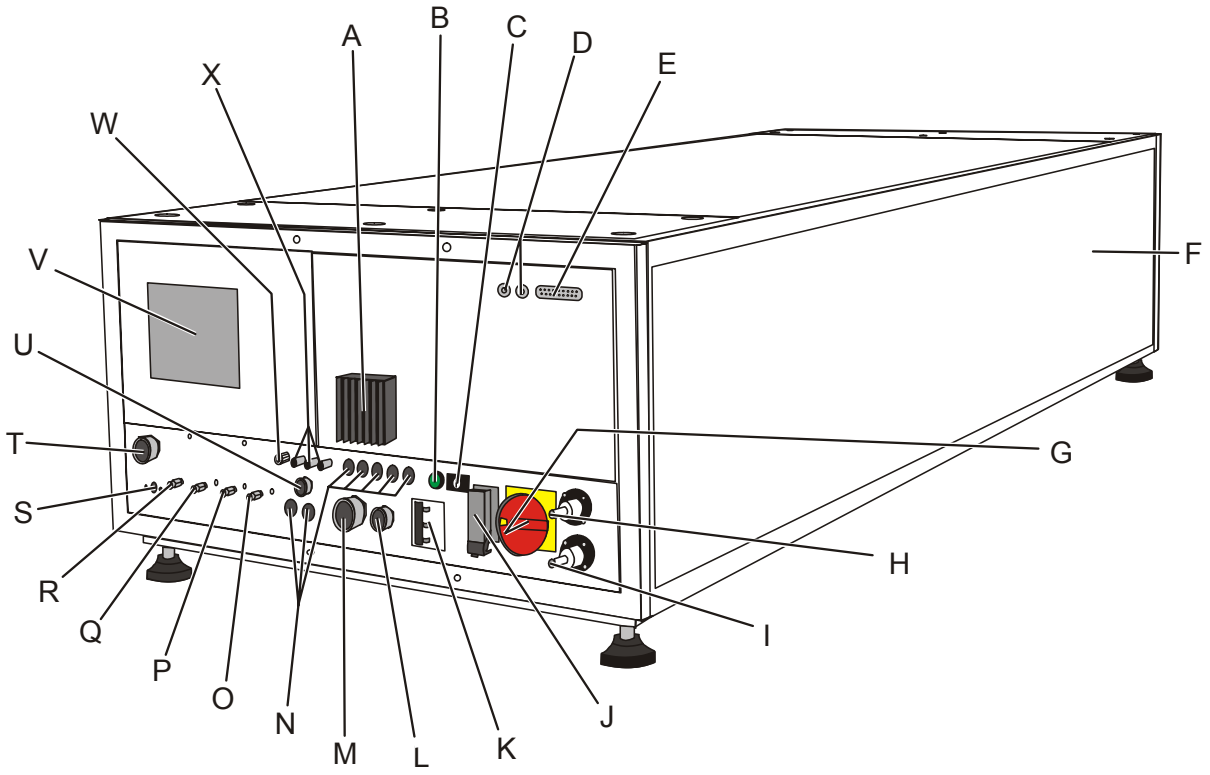

Figure 6: *View of rear and left-hand side of laser head*

Key to Figure 6:

A	Beam shutter (closed position, covering rear beam exit aperture)
B	Laser device ON warning light
C	Key switch
D	Ext. Trigger In, Sync. Out BNC sockets
E	Communication Interface socket (RS 232)
F	Right side cover (thyratron adjustment)
G	Main switch
H	Cooling water inlet
I	Cooling water outlet
J	Vacuum pump connection (electrical)
K	Circuit breaker
L	Mains input
M	Mains voltage output to HV power supply module
N	Fuses
O	Buffer gas connection
P	Rare gas connection
Q	Halogen gas connection
R	Inert gas connection
S	Purge gas connection
T	HV input from HV power supply module

A0409LPX

U Vacuum pump connection (gas)
V Exhaust port
W Ground connection
X Data connections (Trigger, Data Out and Data In)

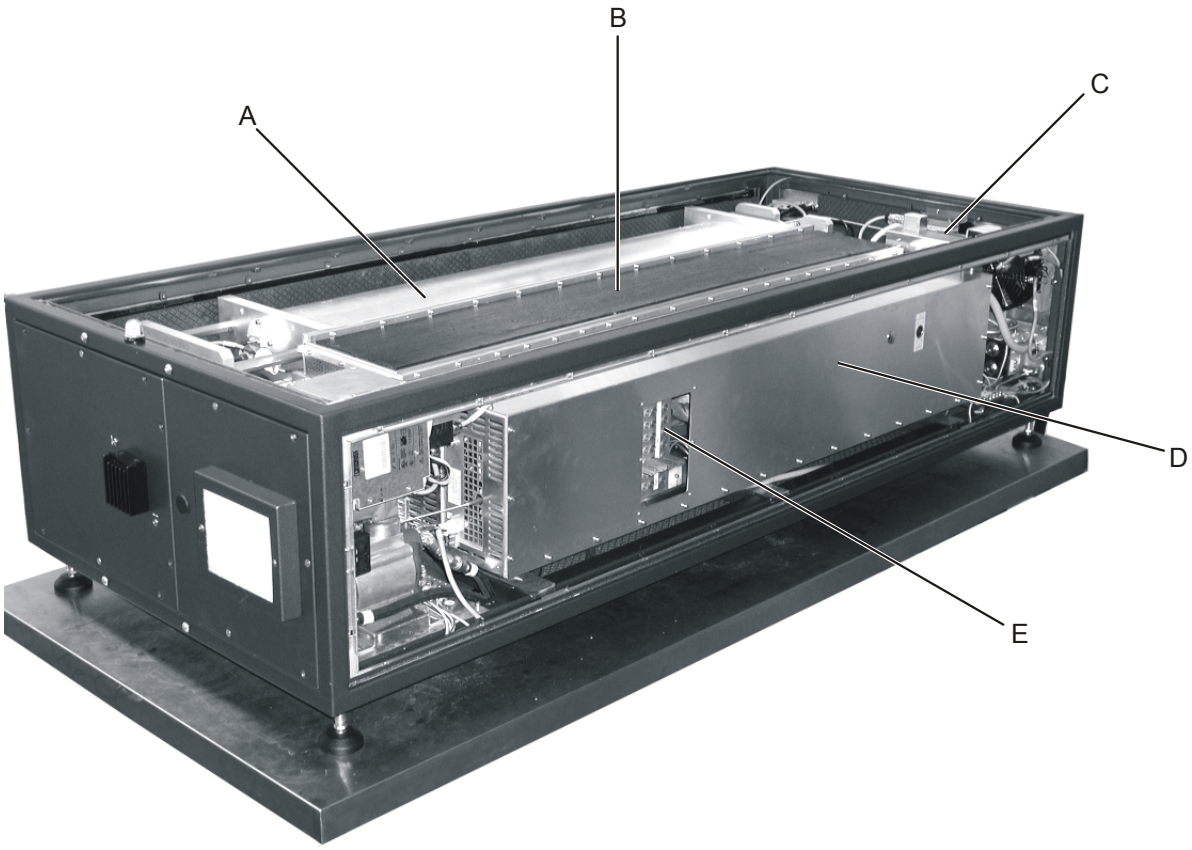

Figure 7: *Laser head without service panels, top cover and right side panel*

Key to Figure 7:

A Laser tube (NovaTube®)
B Discharge unit
C Gas handling module
D Thyratron supply unit
E Thyratron adjustment panel

A0409LPX

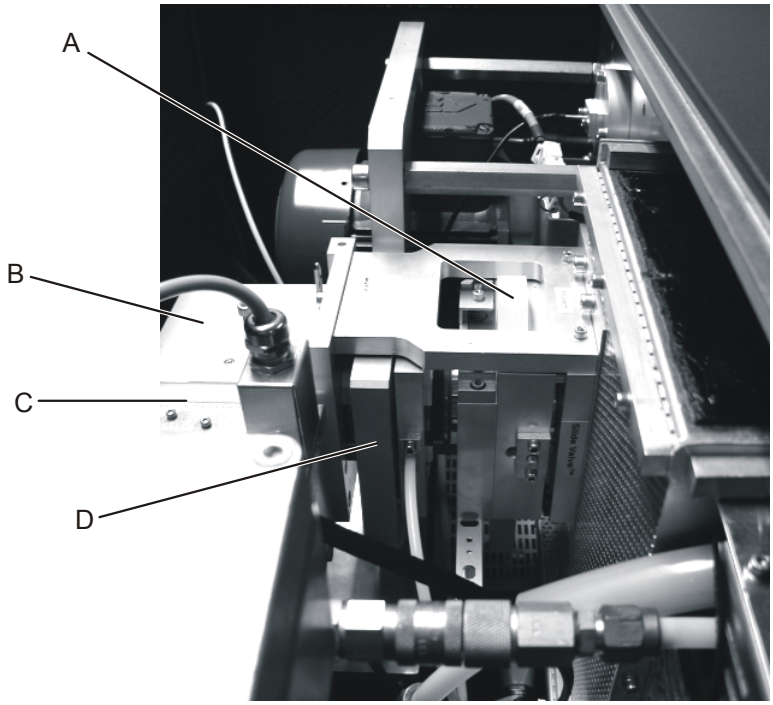

Figure 8: *View of front service area*

Key to Figure 8:

A SlideValve® (front window)
B Beam splitter holder
C Energy monitor
D Output coupler mount

A0409LPX

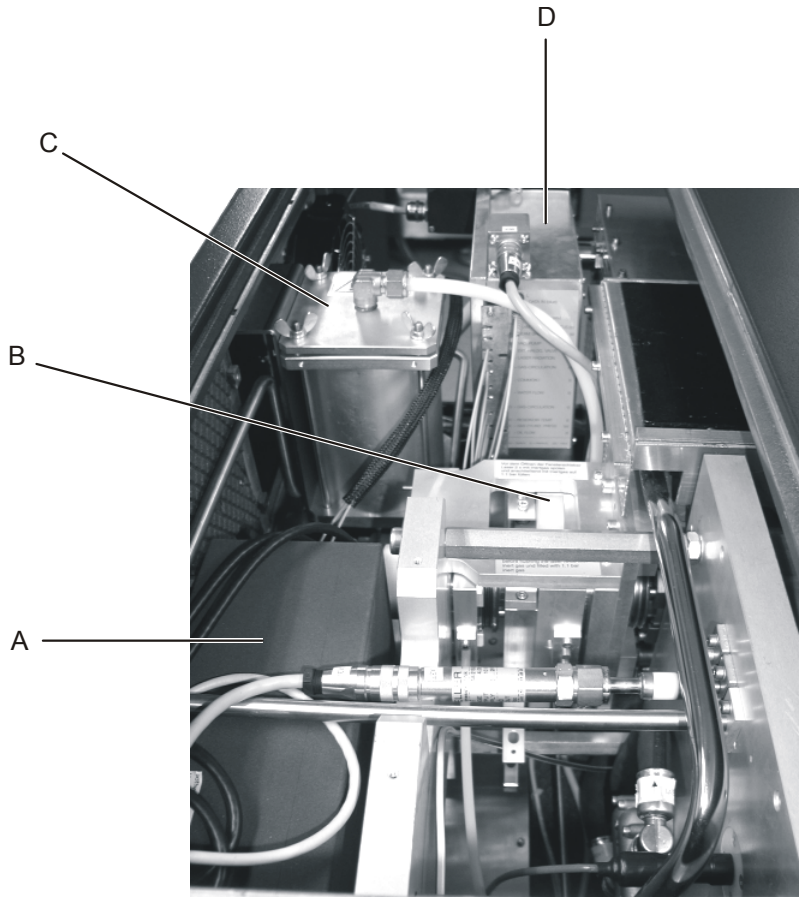

Figure 9: *View of rear service area*

Key to Figure 9:

A Communication interface (CI)
B SlideValve® (rear window)
C Halogen filter housing
D Gas handling module
E Exhaust fan

A0409LPX

2.3.2 Handheld Keypad

The handheld keypad (see Figure 10) is the standard user interface to the communication interface (CI) that controls the laser device. It consists of a LCD display and membrane keyboard. The handheld keypad is connected to the CI situated inside the laser head through a RS232 serial interface located on the connection side of the laser head (see Figure 6 on page 14). The functions of the keys on the handheld keypad are explained in Section 6.1.3 on page 114.



Figure 10: *Handheld keypad*

2.3.3 Optional Halogen Source

As an option, the LPX*Pro* can be equipped with the Halo Safe® halogen source. This enables the on-site production of the required halogen, thereby eliminating the need for compressed gas cylinders containing the hazardous hydrogen flourine/chloride and the necessary halogen gas safety fittings. This considerably simplifies gas handling.

In addition, the halogen source, provides purer halogen that halogen from the cylinder, thereby reducing the contamination of the optics.

A0409LPX

2.4 Primary System Components

2.4.1 Laser Tube

The laser tube (NovaTube®) can be considered as the motor of the laser. Figure 11 shows a cutaway drawing of the longitudinally symmetrical laser tube.

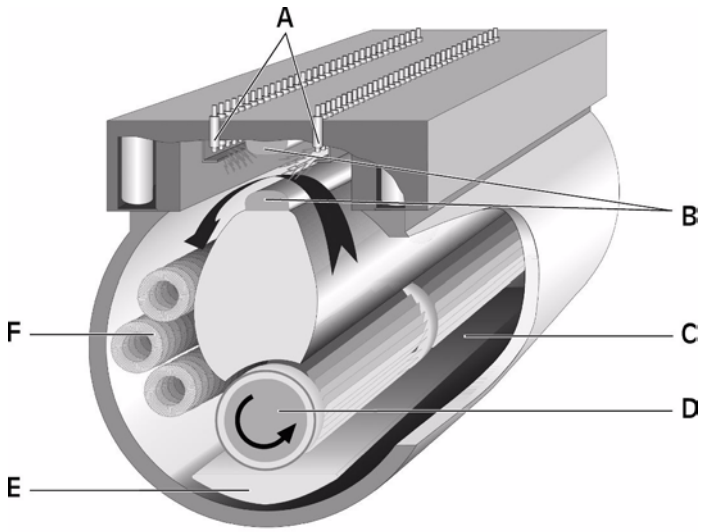

Figure 11: *Cutaway drawing of the laser tube*

The laser tube (C) is the reservoir for the laser gas. The materials chosen allow the problem-free use of excimer gas mixtures. The material surfaces become coated with a layer of halogen metal complex. This process, resulting from a reaction between halogen (laser gas) and metal (material within tube), is called passivation. Passivation renders the material surfaces within the tube chemically inert to halogen.

A repetition of this process, known as re-passivation, is always required if the surface passivation has been damaged as a result of air entering the laser tube or when the laser device or laser tube has been transported or stored for longer periods.

A high voltage discharge between the electrodes (E) transfers the energy to the excimer gas mixture. In order to obtain a controlled, spark-free discharge, the laser gas has to be pre-ionized, i.e. a sufficiently high density of free charged molecules has to be created between the electrodes. This is achieved with pre-ionization pins (F) arranged along the main electrodes. The result is a homogeneous pre-ionization of the laser gas. The switching of pre-ionization and main discharge in series ensures a perfect synchronization between pre-ionization and main discharge.

A0409LPX

After the high-voltage discharge, thermal inhomogenities in the laser gas arise in the discharge area. Therefore, the gas volume in the discharge area has to be completely exchanged between two laser pulses. A transverse circulation fan (A) positioned within the laser tube causes the gas volume between the main electrodes to be completely replaced between two successive laser pulses. The circulation fan is driven externally via a magnetic coupling by a single-phase motor.

The energy efficiency of the excimer laser is to the order of 2%, i.e. the main part of the energy supplied has to be carried away in the form of heat. The gas, heated up by the discharge, reaches the heat exchangers (D) as a result of the flow in the laser tube and is cooled down to the correct operating temperature (approx. 35 °C or 95 °F).

Each discharge pulse results in a load on the pre-ionization mechanism and main electrodes and causes a slight erosion of material. To prevent the particles thus formed from precipitating on the laser windows and consequently diminishing the beam intensity through scattering and absorption, the particles have to be permanently removed from the laser gas. This is achieved by integrating an electrostatic filter (B) as gas purifier in the gas circulation system. The pressure conditions generated by the circulation fan cause the laser gas to continuously flow through this electrostatic filter.

The maintenance operations required during the lifetime of the NovaTube® are new gas fills and the cleaning/exchange of the optical elements (windows, mirrors). To minimize downtimes, the optical elements should be stored as premounted units.

A0409LPX

2.4.2 Resonator Optics

The optical feedback system that amplifies the laser light is provided by a plane-parallel resonator (see Figure 12).

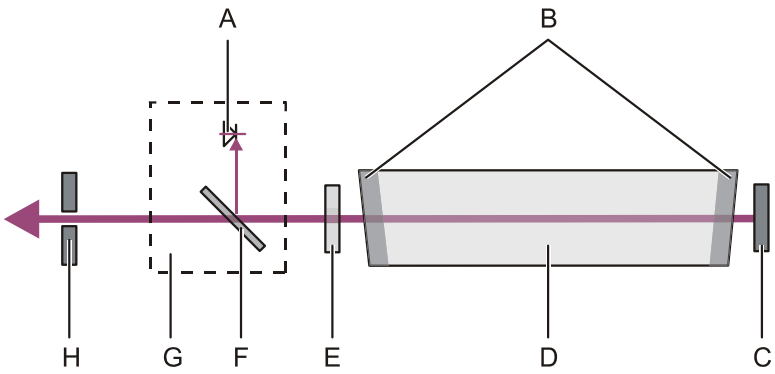

Figure 12: *Laser resonator and energy monitor*

At the rear of the resonator is a highly reflective (HR) mirror (C). The other resonator mirror (F) is known as the output coupler. This is a partially reflective (PR) mirror that allows part of the laser light to escape from the resonator, thereby forming the laser beam.

The resonator mirrors are separated from the laser tube. This external resonator configuration ensures stable beam performance as the resonator mirrors are not affected by temperature or pressure effects inside the laser tube.

The gas volume of the laser tube is sealed by windows (B) attached on each side of the laser tube.

2.4.3 Energy Monitor

The internal energy monitor (see Figure 12, G) is situated between the output coupler (F) and beam shutter (H). A portion of the beam emitted through the output coupler is diverted by a beam splitter optic (F) and reflected through attenuators to a UV photodiode (A). The output from the UV photodiode is converted to a voltage signal. The peak value of this signal is digitally encoded and transmitted to the communication interface.

As the energy monitor does not supply absolute measured values, it has to be calibrated according to an externally measured energy reading. In addition to an external measuring device, no further measures are required, calibration is performed using the laser control software's dedicated calibration procedure that can be accessed through the handheld keypad or external PC.

A0409LPX

2.4.4 High Voltage Circuit

The high voltage (HV) circuit provides the rapid high-voltage discharge required to obtain efficient excitation of the laser gas. The primary components of the HV circuit are the HV power supply module (see Section 2.4.4.1 on page 23), thyratron (see Section 2.4.4.2 on page 23) and storage capacitors as well as the discharge electrodes and peaking capacitors of the NovaTube® (see Section 2.4.1 on page 19).

The duration of the high-voltage discharge is about 50 ns and the peak power can reach one gigawatt. The discharge is fed from peaking capacitors. These are a large number of discrete ceramic high-voltage capacitors coupled directly to the laser tube's discharge electrodes with minimum inductance.

The peaking capacitors are charged from a current pulse supplied from the storage capacitors. The storage capacitors are charged by the HV power supply module between laser pulses. As soon as the storage capacitors are charged, the laser is ready to pulse. The laser pulse is triggered by the HV switch (thyratron), which switches the recharging of the storage capacitors. The working principle of the high voltage circuit is shown in Figure 13.

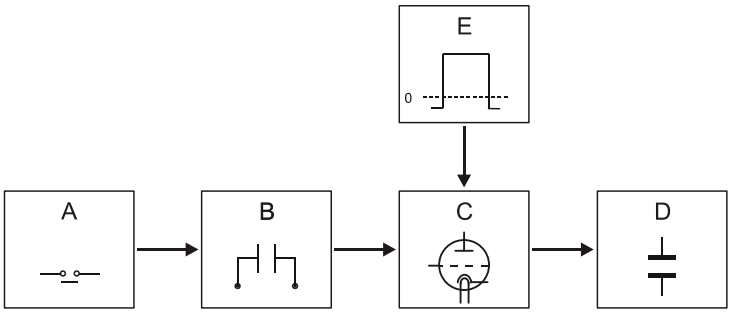

Figure 13: *Layout of the high voltage circuit*

Key to Figure 13:

A HV power supply
B Storage capacitors
C Thyratron
D Peaking capacitors of the discharge unit
E HV trigger generator

A0409LPX

2.4.4.1 HV Power Supply

The HV power supply module is a high voltage, switching power supply specifically designed for charging capacitors in laser systems. Incorporated is a high-performance control module that precisely regulates the output voltage, automatically compensating for line, load, temperature, repetition rate and program voltage variations. The HV power supply module converts mains three-phase current into the high voltage DC required by the discharge circuit.

2.4.4.2 Thyratron

The laser uses a simple 3-inch hydrogen thyratron, a thermionic tube. It is used as an active switch to discharge the storage capacitors. The anode of the thyratron is connected to the charging voltage. The cathode is connected to ground. Between these two main electrodes is the control grid, which initiates the discharge (switching) of the thyratron.

As is also the case with conventional thermionic tubes, the cathode structure has to be heated in order to ensure sufficient emission of starting electrons. If the electron emission after a longer operating period is no longer sufficient to initiate switching of the thyratron, this can be corrected during the thyratron lifetime by increasing the heating power of the cathode. Hydrogen is necessary to provide a fast current increase and a high current intensity. However, as hydrogen is continually lost due to diffusion and metal erosion, the concentration of hydrogen has to be continually renewed. For this purpose, there is a reservoir structure (palladium) in the tube, in which a large quantity of hydrogen is stored. By heating the reservoir, hydrogen is released from the reservoir into the main thyratron. It should be noted, however, that too much hydrogen reduces the hold-off voltage between the electrodes of the thyratron to such a level that unwanted switching of the thyratron will take place even without the trigger pulse. On the other hand, if the partial hydrogen pressure in the thyratron is too low, the laser is unable to pulse. This is because there is no discharge in the thyratron due to a lack of charged particles.

The values for the two heating voltages, U_H for the cathode heating and U_R for the hydrogen reservoir voltage, are critical to the correct operation of the tube. The voltages are stabilized in a broad input voltage range in order to be unaffected by voltage fluctuations in the supply line (spikes). These values have to be altered during the total life of the thyratron to ensure proper switching of the tube. This can be done simply by using the jumpers provided for this purpose. You will find a description of the thyratron adjustment in Section 7.9 of this manual.

A0409LPX

2.4.5 Laser Control System

The fundamental layout of the control system for the LPX*Pro* is shown in Figure 14.

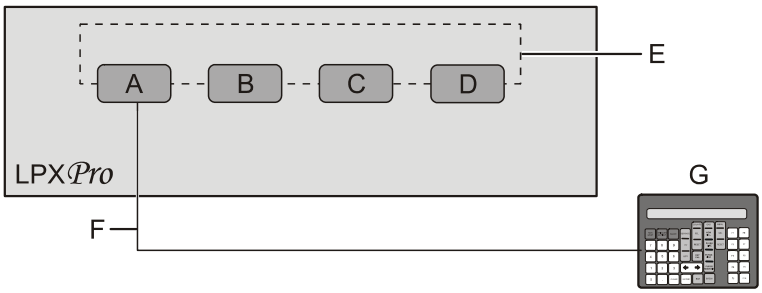

Figure 14: *Laser control system with handheld keypad*

Key to Figure 14:

A	Communication interface (CI)	E	FOL data ring
B	Energy monitor	F	RS232 connection
C	Gas handling module	G	Handheld keypad
D	HV power supply module		

The communication interface (CI, see Figure 14, A) is the central control module. Partial tasks are carried out independently by dedicated submodules such as the gas handling module (B), energy monitor (C) and the HV power supply (D). Each of the submodules has an address assigned to it which can be actuated by the CI.

The individual modules communicate through a data ring (E) made up of fiber optic lightwave guides (FOLs). The information is optically coded by the CI and given to or received by the data ring as a sequence of light pulses. As the FOL data ring cannot pick up or trasmit interference due to electromagnetic radiation (such as that generated through the fast high voltage discharge), this system ensures safe, interference-free communication within the laser device.

The user interface to the laser control system is the handheld keypad (G) or external control PC (remote PC). These devices communicate with the CI through the serial interface (RS232) situated on the connection side of the laser head. The CI also supports the input of externally generated trigger pulses (EXT TRIG.) and the output of synchronisation pulses (SYNC OUT).

A0409LPX

2.4.6 Electrical System

The laser device is connected to a three-phase power supply. The individual consumers in the laser device are either connected to all three phases, to a single phase or to a 24 V DC circuit.

The three-phase consumers in the laser device include the HV power supply module, gas circulation fan and vacuum pump.

The single-phase consumers include cooling and exhaust fans.

The 24 V DC power supply serves the low voltage consumers. These include the solenoid gas valves, gas purifier and various decentralized control modules.

The components in the electrical system are not subject to routine maintenance.

2.4.7 Gas Supply / Exhaust System

The required excimer laser gases are supplied from an external source through dedicated supply lines. In the case of fluorine, the gas can either be supplied from a gas cylinder or from a halogen source (fluorine source).

The gases are mixed for laser operation in the laser tube. The gas evacuated from the laser tube is filtered, so that it is free of halogens, and then blown out through the exhaust.

The inlet and evacuation of gases is controlled by solenoid valves actuated through signals received through the FOL data ring.

The layout of the gas supply and exhaust system is shown in the following diagrams.

– Figure 15 shows the layout of the gas supply / exhaust system when the halogen is supplied from a gas cylinder.

– Figure 16 shows the layout of the gas supply / exhaust system when the halogen is supplied from a halogen source (fluorine source). The function of the halogen source is, however, not described in this section as this is explained in more detail in a separate manual that will be provided if the laser is equipped with a halogen source.

A0409LPX

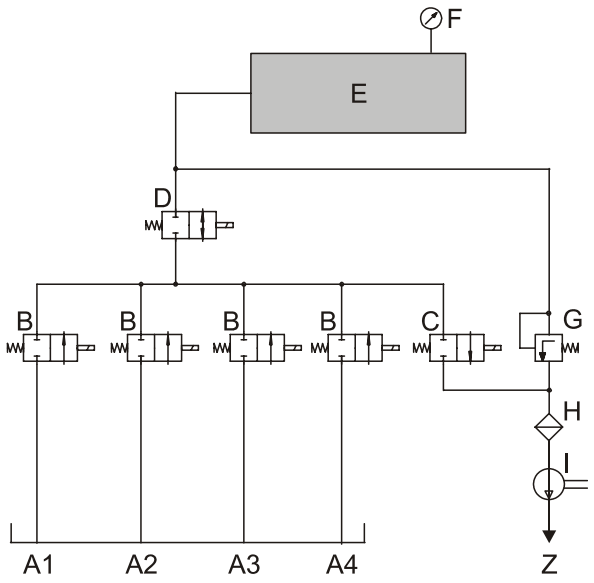

Figure 15: *Laser gas supply / exhaust without halogen source*

Key to Figure 15:

A	Gas connection (1 = Buffer, 2 = Rare, 3 = Inert, 4 = Halogen)
B	Excimer laser gas valve (Buffer, Rare, Inert, Halogen)
C	Vacuum valve
D	Laser tube (head) valve
E	Laser tube (NovaTube®)
F	Laser tube pressure sensor
G	Pressure relief valve
H	Halogen filter
I	Vacuum pump
Z	Exhaust

A0409LPX

The individual gas supply lines are connected to the laser device at the corresponding connections (see Figure 6, A) situated on the connection side of the laser head.

The gas solenoid valves (B) are normally closed. They are opened to allow the corresponding gas to flow into the gas manifold.

The vacuum valve (C) is a solenoid valve that is normally closed. It is opened to allow the gas in the gas manifold to be pumped out through the exhaust by the vacuum pump.

The head valve (D) is a solenoid valve that is normally closed. It is opened to allow the gases to flow from the gas manifold into the NovaTube® (E).

The pressure sensor (F) situated at the rear of the NovaTube® provides a tube pressure reading that can be polled through a software command.

The pressure relief valve (G) opens when the pressure in the NovaTube® is too high.

The halogen filter (H) removes molecular species of halogen gas from the laser gas mixtures exhausted from the NovaTube®.

The vacuum pump (I) exhausts the gases from the NovaTube®. It is started and stopped through signals received through the FOL data ring.

Apart from turning on the externally supplied gases and regulating the pressure of the gases in the external gas circuits, the gas supply and exhaust requires no operation or routine maintenance.

A0409LPX

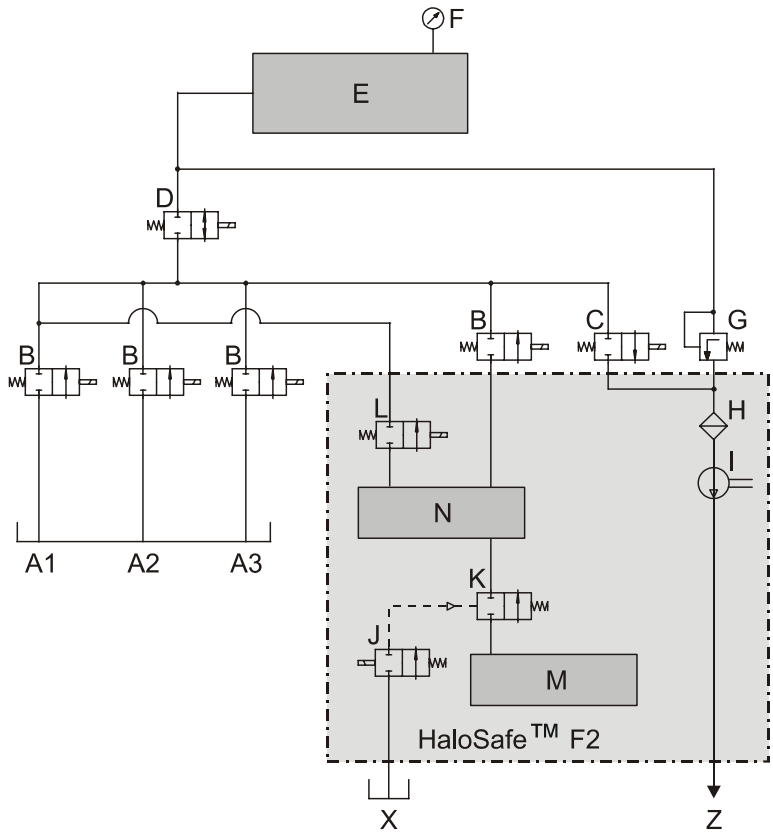

Figure 16: *Laser gas supply / exhaust with fluorine source*

Key to Figure 16:

A	Gas connection (1 = Buffer, 2 = Rare, 3 = Inert)
B	Excimer laser gas valve (Buffer, Rare, Inert, Halogen)
C	Vacuum valve
D	Laser tube (head) valve
E	Laser tube (NovaTube®)
F	Laser tube pressure sensor
G	Pressure relief valve
H	Halogen filter
I	Vacuum pump
J	Pilot valve
K	Fluorine valve
L	Halogen-Buffer valve
M	Reactor
N	Accumulator
X	Control pressure connection (6.5 bar)
Z	Exhaust

A0409LPX

2.4.8 Cooling Water System

The efficiency of commercial excimer lasers is theoretically in the region of between 1 and 4 %. The remaining energy is almost completely converted to heat and has to be eliminated by an effective cooling system.

The cooling system cools the laser tube (NovaTube®) through tap water. The layout of the cooling water circuit is shown in Figure 17.

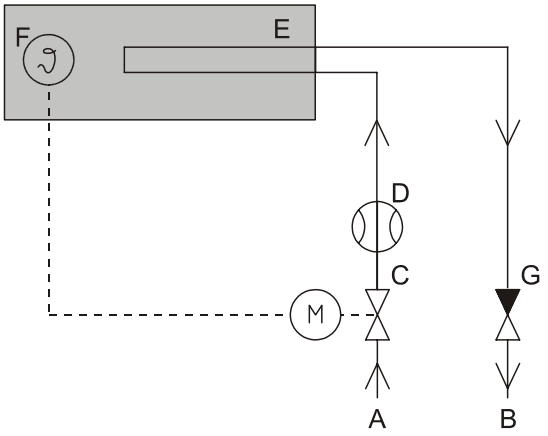

Figure 17: *Cooling water circuit*

Key to Figure 17:

A	Cooling water inlet	E	Laser tube
B	Cooling water outlet	F	Laser tube temperature sensor
C	Flow regulating valve	G	Check valve
D	Water flow sensor		

The external cooling water supply and drain is connected to the laser device at the inlet (A) and outlet (B) connections situated on the connection side of the laser head.

The flow sensor (D) ensures that sufficient water flows into the laser device. If the water flow is not sufficient, an interlock is activated.

The Temperature sensor (F) monitors the temperature in the NovaTube® (E). If the temperature is too high or too low a signal is sent to the flow regulating valve (C). This automatically increases or decreases the water flow as required to ensure that the respective module operates at the correct temperature.

The check valve (G) ensures that cooling water does not re-enter the laser device at the cooling water outlet.

Apart from turning on the external water supply and ensuring that the outlet water flows into an appropriate drain, the cooling water circuit requires no operation or routine maintenance.

A0409LPX

2.4.9 Purge Gas System

UV light reacts with oxygen to create ozone. Apart from creating a health hazard (for more information, see Safety Manual), this oxidizes the surface of the optics and decreases laser performance.

To prevent ozone production, the beam path is purged with nitrogen (purge gas).

The external purge gas supply is connected to the corresponding connection on the laser head. The pressure of the purge gas entering the purge gas system is monitored by a pressure switch.

Apart from turning on the externally supplied purge gas and regulating the pressure of the gas in the external circuit, the purge gas supply requires no operation or routine maintenance.

2.5 Monitoring and Fail-Safety Systems

2.5.1 Watchdogs

The LPX*Pro*, like all of Lambda Physik excimer lasers using serial data rings, has watchdogs to ensure functional checks. Watchdogs are switches which alter the logical level as soon as the reset pulses stop.

The watchdog is reset by the control at least three times a second. Should the pulses stop, as in the case of a breakdown, this is recognized by the watchdog belonging to the module. The module is switched to a safe, inactive state.

2.5.2 Data Ring Selftest

After the system is booted, a self-test is automatically carried out in order to test the data ring and the modules for error-free interaction. The serial structure of the data ring requires all modules working properly and the controller receiving a correct response for a transmitted signal. If this does not occur, the controller sends a failure message. In this situation it is not possible for the controller to localize the error.

A0409LPX

2.5.3 Interlocks

'Interlock' refers to an error message indicating a malfunction or critical interference in the functioning of the laser.

The response of the laser to the interlock may vary; when the user needs to be protected, the laser is completely switched off. When the malfunction is correlated to the laser only, the high voltage is switched off and disabled.

The advantages of this method are:

– no need for the entire system to be restarted in case of a straight-forward malfunction,

– communication with the processor is still possible.

2.5.4 External Interlock and Laser Warning Lamp

Dedicated contacts are provided to secure the room in which the LPX*Pro* is operating through one or more remote interlock switches (e.g. door switches) and an external warning lamp.

If the circuit conncted to the remote interlock contacts is interrupted (e.g. by opening a door), the HV power supply will be shut down, thereby preventing laser radiation from being generated. As soon as the contacts are closed again, the laser can be restarted. When a restart after activation of an external interlock is to be prevented, the contacts will have to be intergrated into an emergency off circuit.

The external warning lamp will light as soon as laser radiation is emitted.

For further information about the external interlock and warning lamp contacts, please refer to Section 4.7.1 on page 78.

2.6 Pulse Triggering Modes

The LPX*Pro* operates as a pulsed laser. The discharge and, consequently, the emission of the individual laser light pulses can be triggered either internally or externally.

- With internal triggering, the laser light pulses are triggered by the laser device's internal trigger generator. Triggering occurs continuously at the repetition rate (rep. rate) set by the user through the laser control software (see Section 8.4.4.6 on page 242).
- With external triggering, the laser light pulses are triggered from an external trigger generator that is connected to the external trigger socket on the industrial computer (see Section 4.7.3 on page 80).

A0409LPX

2.7 Energy Management

The pulse energy (output energy) of an excimer laser is dependent upon the charging voltage (high voltage) and condition (age) of the excimer laser gas.

When the pulse energy (E) is considered as a function of the charging voltage (U), the result is approximately the function shown in Figure 18.

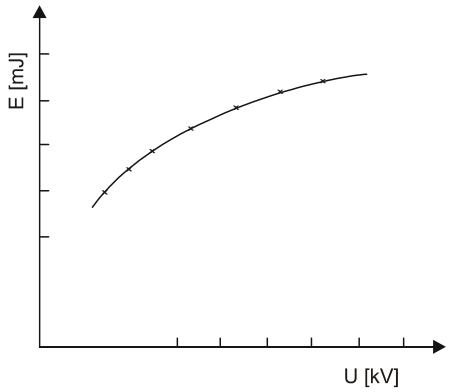

Figure 18: *Pulse energy as a function of charging voltage*

As excimer laser gases age, the pulse energy obtained from a given charging voltage will decrease. Consequently, the LPX*Pro* can be operated in one of two fundamental running modes: the Energy Constant mode (EGY CONST) or the High Voltage (HV) Constant mode (HV CONST).

Regardless of the running mode used, the laser gas quality will reach a state which is insufficient to adjust the HV power supply at a level that provides the preset beam output energy. In this case, the laser gas is to be exchanged completely using the New Fill procedure. The New Fill procedure requires special interaction with the user or Remote PC.

2.7.1 Fundamental Running Modes

When the *Energy Constant* mode is selected, the laser control continuously adjusts the high voltage to achieve laser operation at a preset energy level (see Figure 19).

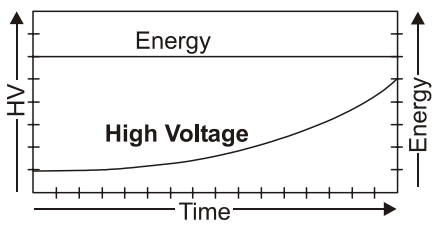

Figure 19: *Voltage increase in the Energy Constant mode*

A0409LPX

When the *HV Constant* mode is selected, the pulse energy decreases with time as excimer laser gases have a limited lifetime (see Figure 20).

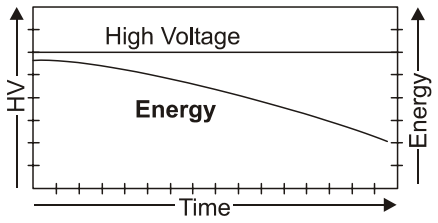

Figure 20: *Energy decrease in the HV Constant mode*

Most applications require the energy constant mode, whereas the high voltage constant mode is primarily used for diagnostic purposes (e.g. to measure the gas lifetime).

2.7.2 Constant Energy Operation With Gas Actions

If excimer lasers are operated continuously, the pulse energy as a function of time and particularly as a function of the number of laser pulses shows a clear drop.

In order to keep the desired pulse energy of the laser constant, the laser control software's Partial Gas Replacement (PGR) mode can be selected. In this mode, various gas actions are performed after a given number of laser pulses, after a given time period or when a predefined HV level or laser tube pressure is reached. The gas actions performed in the PGR mode can be fundamentally classified as halogen injections (see Section 2.7.2.1) and partial gas replacements (see Section 2.7.2.2).

2.7.2.1 Halogen Injections

Halogen concentration decreases slowly, even in well passivated systems. This leads to lower pulse energy. A portion of halogen is, therefore, added to the gas fill to compensate for the loss of halogen partial pressure. This action is known as a halogen injection (HI).

A0409LPX

Halogen injections are carried out when the high voltage (HV) reaches a predefined value for the gas refreshment action. This value is referred to in Figure 21 as the replacement value (HV_{repl}).

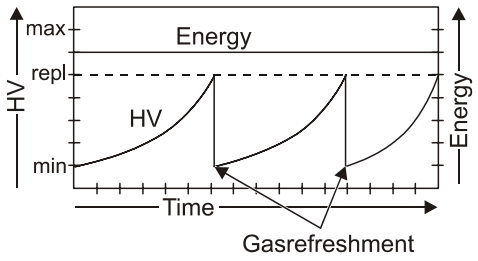

Figure 21: *Charging current with halogen injections*

2.7.2.2 Partial Gas Replacements

The partial gas replacement (PGR) is used to adjust the composition of the gas mixture to the original value and remove impurities which may have built up during laser operation or idle time. In addition, the PGR adjusts the gas pressure in the laser tube, which is increased by numerous micro halogen injections, back to the normal level.

During the PGR, laser gas is released through the halogen filter and halogen, rare and buffer gases are refilled accordingly, dependent on the preset gas partial pressures.

According to the control software configuration a PGR is requested:

– when a given number of pulses is reached

– after a given time period has elapsed

– after a predefined increase in the laser tube pressure has occurred

– when the HV reaches the predefined replacement value and the previous macro halogen injections did not sufficiently reduce the HV level (see Figure 22).

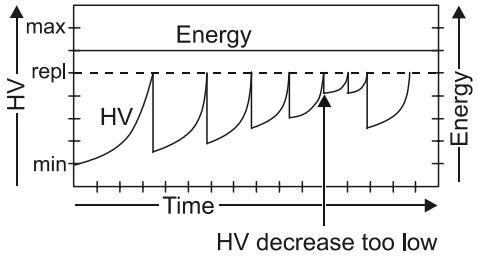

Figure 22: *Charging current with Partial Gas Replacement*

A0409LPX

If the PGR has been requested from the system controller it must be triggered from the external Remote PC or from the handheld keypad within a time period of ten minutes.

2.7.3 Constant Energy Operation Without Gas Actions

The No Gas Replacement (NGR) operating mode is a constant energy mode without any gas replenishment.

When high voltage reaches the level HV_{repl} the message “Preset Energy too high” appears to indicate that a new gas fill is needed. Laser operation will be continued until HV_{max} is reached. The laser then shuts off automatically (see Figure 23).

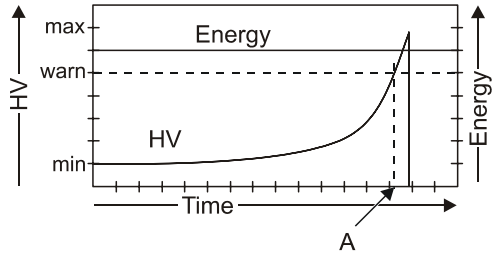

Figure 23: *Charging current with No Gas Replacement (NGR)*

2.8 Operating Modes

Figure 24 provides an overview of the available operating modes and the possible transitions between these modes. These operating modes are briefly described in the following subsections..

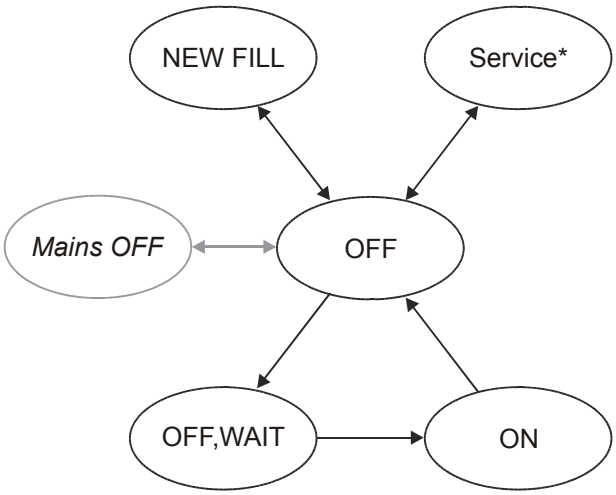

*PASSIVATION FILL, TRANSPORT FILL, PURGE <xy> LINE, ENERGY CAL, CAPACITY RESET, HI, PGR etc.

Figure 24: *Operating mode transition diagram*

A0409LPX

2.8.1 OFF Mode

The laser control software automatically selects the OFF mode after switching on the laser device. The OFF mode can also be selected by the user from the ON mode to stop laser operation.

In the OFF mode, all laser device system modules, except the high voltage (HV) power supply, are switched on. No laser operation occurs (no emission of laser radiation). The gas circulation fan in the laser tube runs to ensure that the laser gas is at working temperature.

This mode should be selected if the laser device is not directly in use. Gas actions like PGRs and New Fills can this be reduced as the laser gas is not being exhausted .

From the OFF mode, the user can select service actions, start the laser or switch off the laser. Before reaching the ON mode, the laser passes through the OFF, WAIT mode.

2.8.2 OFF, WAIT Mode

The temporary OFF, WAIT mode is automatically passed through when the laser is starting. In this mode, the laser controller waits for the HV power supply to enter standby and the gas circulation fan to start. This condition remains for approx. 5 seconds.

2.8.3 ON Mode

The ON mode can only be started from the OFF mode. In this mode, the HV power supply is switched on and laser operation starts with the currently active operating mode (energy management selection) and parameter settings.

When the laser is in the ON mode and the shutter is open, the workpiece will be irradiated with laser light pulses.

For short breaks in laser operation, the shutter can be closed. If a longer break is necessary, it is advisable to switch back to the OFF mode.

2.8.4 NEW FILL Mode

The NEW FILL mode is actuated by the user to execute a complete refill of the laser tube. The complete gas mixture is pumped out of the laser tube and replaced by fresh gas.

The NEW FILL mode is actuated from the OFF mode. At the end of the new fill, the OFF mode is automatically reactivated.

A0409LPX

2.8.5 HI/PGR Mode

In the HI/PGR mode gas actions are performed when the laser is operating in the constant energy mode with gas actions (see Section 2.7.2 on page 33). Depending on the configuration of the control software, the software issues a request for a gas action. The operator or remote control program can activate the HI/PGR mode within a period of 10 minutes to trigger the gas action.

2.9 Laser Operation

All operating modes and laser parameters can be set and the status requested from the communication interface through the handheld keypad or external PC connected to the serial interface on the laser head. The status of the laser device is indicated by a status code that is indicated on the handheld keypad display (see Section 6.1.3.1 on page 116) or output through the serial interface together with the currently active operating mode. The meaning of the individual status codes is described in Section 8.3.4 on page 234.

If a status code indicates an interlock or error that requires interaction with the user, solve the problem according to the information given in Section 8.3.4 on page 234.

A0409LPX

A0409LPX

3 SAFETY

Never switch on or attempt to operate or service the LPX*Pro* excimer laser device before reading, understanding and fully familiarizing yourself with the contents of this chapter.

This chapter is divided into three sections:

– General Safety Aspects, which explains aspects relating to the safe operation of the laser device.

– Special Safety Aspects, which outlines the risks specific to working procedures with and on this laser device.

– Overview of safety-relevant labels, which shows the design of and describes the safety labels.

3.1 General Safety Aspects

3.1.1 Applicable Standards

The equipment has been tested and found to comply with the following standards and directives about safety of laser products:

– IEC 60825-1 (1994) + A11 (1996)
(IEC 825-1: 1993)

– IEC 61010-1 (1990) + A1 (1992) + A2 (1995)

– EN 61010-1 (1993) + A2 (1995)

– UL 3101-1

– Low voltage directive (73/23/EEC)

– Pressure equipment directive (97/23/EG)

– FDA Accession 7810443

All laser products from Lambda Physik are compatible with the European laser safety standard EN 60825.

A0409LPX

3.1.2 Basic Operation and Designated Use

The LPX*Pro* laser device has been built in accordance with state-of-the-art standards and recognized safety rules. Nevertheless, its use may constitute a risk to life and limb of the user or of third parties or cause damage to other material property.

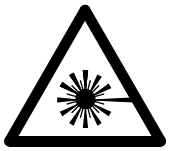

WARNING
Potential eye and skin burns!
Only use the laser in accordance with its designated use. Safety interlocks are only to be defeated by authorized personnel.

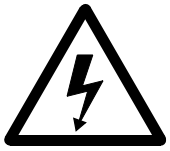

WARNING
Electrical hazard!
Safety interlocks are only to be defeated by authorized personnel.



WARNING!
Toxic hazards!
The gas system of an excimer laser contains a mixture of halogen gases (fluorine or hydrogen chloride). Inhalation of, or skin contact with, halogen gases should be avoided.

The laser device shall only be used in technically perfect condition and in accordance with its designated use and the instructions set out in this manual, and only by safety conscious persons who are fully aware of the risks involved in operating the laser device. Any functional disorders, especially those affecting the safety of the laser device, should therefore be rectified immediately.

The LPX*Pro* laser device is a UV laser light source that is primarily designed for use in high-end scientific and medium duty-cycle industrial applications. Using the laser device for purposes other than those mentioned above is considered contrary to its designated use. The manufacturer/supplier cannot be held liable for any damage resulting from such use. The risk of such misuse lies entirely with the user.

Operating the laser device within the limits of its designated use also involves observing the instructions that are set out in this manual as well as complying with inspection and maintenance directives.

A0409LPX

3.1.3 Organizational Measures

In accordance with the valid national regulations for prevention of accidents (in Germany: VBG 93, in the USA: ANSI Z 136.1) a responsible person should be designated as the Laser Safety Officer (LSO) with the responsibility to effect the knowledgeable evaluation of laser hazards and to monitor and enforce their control.

The instruction manual must always be at hand at the place of use of the LPX*Pro* laser device. In addition to the instruction manual, observe and instruct the user in all other generally applicable legal and other mandatory regulations relevant to accident prevention and environmental protection. These compulsory regulations may also deal with the handling of hazardous substances and the issuing and/or wearing of personal protective equipment.



WARNING
Risk of serious injury through incorrect operation!
Personnel entrusted with work on the LPX*Pro* laser device must have read the instruction manual and in particular the safety instructions before beginning work. Reading the instructions after work has begun is too late.

The necessity of reading the instruction manual applies especially to persons working only occasionally on the LPX*Pro*, e.g. during setting up, service or maintenance.

Use personal protective equipment (PPE), e.g. protective eyewear, wherever required by the circumstances or by law (see Section 3.2.2 on page 48 or the separate Site Preparation Manual).

Ensure that all safety-relevant labels are attached to the laser device in accordance with the label location diagrams in Section 3.3 on page 61. Make sure that these labels are always complete and perfectly legible. If any labels are missing, immediately inform Lambda Physik.

In the event of safety relevant modifications or changes in the behaviour of the LPX*Pro* during operation, stop the laser device immediately and report the malfunction to the competent authority/ person (e.g. Lambda Physik Service).

Never make any modifications, additions or conversions which might affect safety without the suppliers approval. This also applies to the installation and adjustment of safety devices and valves.

Spare parts must comply with the technical requirements specified by the manufacturer. Spare parts from original equipment manufacturers can be relied upon to do so.

Never modify the software of programmable control systems.

Adhere to prescribed intervals or those specified in the instruction manual for routine checks and inspections.

For the execution of maintenance work, tools and workshop equipment adapted to the task on hand are absolutely indispensable.

A0409LPX

3.1.4 Selection and Qualification of Personnel - Basic Responsibilities

Make sure that only authorized personnel works on or with the LPX*Pro* laser device. Statutory minimum age limits must be observed.

Employ only trained or instructed staff and set out clearly the individual responsibilities of the personnel for operation, set up, maintenance and repair.

Do not allow persons to be trained or instructed or persons taking part in a general training course to work on or with the LPX*Pro* laser device without being permanently supervised by an experienced person.

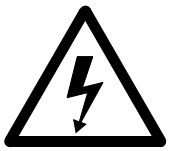

WARNING
Potential electrical hazards!
Work on the electrical system and equipment of the LPX*Pro* laser device must be carried out only by a skilled electrician or by instructed persons under the supervision and guidance of a skilled electrician and in accordance with electrical engineering rules and regulations.



WARNING
Toxic hazards!
Work on gas fuelled equipment may be carried out by specially trained personnel only.

3.1.5 Safety Instructions Governing Specific Operational Phases

Take the necessary precautions to ensure that the LPX*Pro* laser device is used only when in a safe and reliable state.

Operate the laser device only if all protective and safety oriented devices, such as removable safety devices, emergency shut off equipment and exhausters, are in place and fully functional.

In the event of malfunctions, stop the laser device immediately and lock it. Have any defects rectified immediately.

Before starting the laser device ensure that nobody is at risk.

Never switch off or remove suction and ventilation devices when the laser device is in operation.

Observe the adjusting, maintenance and inspection activities and intervals set out in the instruction manual, including information on the replacement of parts and equipment. These activities may be executed by skilled personnel only.

Brief operating personnel before beginning special operations and maintenance work, and appoint a person to supervise the activities.

A0409LPX

In any work concerning the operation, conversion or adjustment of the LPX*Pro* and its safety oriented devices or any work related to maintenance, inspection and repair, always observe the start up and shut down procedures set out in the instruction manual and the information on maintenance work.

Ensure that the maintenance area is adequately secured.

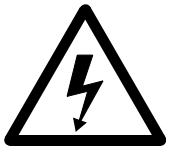

WARNING
Potential electrical hazards!
If the laser device is completely shut down for maintenance and repair work, it must be secured against inadvertent starting. Ensure that the electrical system is locked-out and tagged-out prior to servicing by locking the mains switch of the laser device with a padlock and tagging appropriate warning signs.

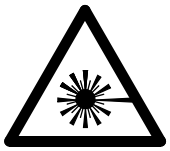

WARNING
Potential eye and skin burns!
If the laser device is completely shut down for maintenance and repair work, it must be secured against inadvertent starting. Ensure that the radiation system is locked-out and tagged-out prior to servicing by locking the mains switch of the laser device with a padlock and tagging appropriate warning signs.



CAUTION
Risk of gas leaks!
Switching off the laser device automatically closes the solenoid valves in the laser device's gas circuit. This interrupts the gas flow in the laser device, but does not evacuate the circuits in the laser device. Also, operating pressure remains in the external gas supply lines. For additional safety, close the corresponding external gas shut-off valves when locking out the laser device.

Always tighten any screwed connections that have been loosened during maintenance and repair.

Any safety devices removed for set up, maintenance or repair purposes must be refitted and checked immediately upon completion of the maintenance and repair work.

Ensure that all consumables and replacement parts are disposed of safely, with minimum environmental impact and in accordance with the valid national and local regulations for waste disposal.

A0409LPX

3.2 Specific Safety Aspects

This section contains the following:

– Section 3.2.1 describes the physical and chemical hazards related to the laser device,

– Section 3.2.2 describes how operators or users of the laser device shall protect themselves against these hazards**,**

– Section 3.2.3 summarizes the constructive protective measures against these hazards.

Lasers and laser systems are classified according to their relative hazards. These classifications can be found in the American National Standard for the Safe Use of Lasers (ANSI Z 136.1-1968), FDA 21 CFR 1040.10 and 1040.11, IEC-825 and in the European Standard EN 60625.

Within this classification, the LPX*Pro* is a Class IV (high power) laser device when operated with open covers during servicing conditions, and must therefore be regarded as a potential hazard to the human operator. The laser beam must also be regarded as a potential fire hazard.

A Class IV laser system is not enclosed and therefore requires several safety precautions. Class IV is the most powerful (and potentially hazardous) category of lasers. Direct and scattered radiation from Class IV products are considered acute hazards to the eyes and skin. Precautions include eye and skin protection, remote interlocks and warning labels.

NOTE
The LPX*Pro* is a class IV laser device. However, when connected to a laser unit (OEM device) with a fully encapsulated beam path, it becomes part of a Class I laser unit.

A Class I laser device is defined as a laser system which is supplied with a special enclosure which does not allow access to hazardous levels of laser light during normal operation. This class of laser does not require special precautions for eye safety during normal operations as long as the protective enclosure is in place.

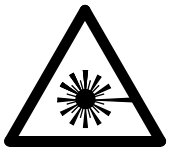

WARNING
Risk of serious injury!
A LPX*Pro* Class I laser system becomes a Class IV system when the enclosure is open.
The laser itself remains a class IV device.

A0409LPX

3.2.1 Physical Hazards

3.2.1.1 Ultra-Violet Light

Laser radiation is emitted as a narrow beam of almost parallel rays, the intensity of which will remain high even at some distance of the laser. Although the radiation is nonionizing, damage can still occur to living tissue, if exposed for too long, as a result of heat produced during radiation absorption.

The radiation of an excimer laser lies outside the visible range. Possible wavelengths for the extremely intensive UV radiation are 157 nm, 193 nm, 248 nm, 308 nm or 351 nm.

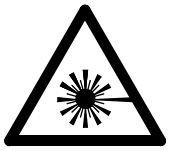

WARNING
The laser beam is very dangerous to the eyes and skin!
The following are hazardous,
1. Direct radiation-light as it leaves the laser.
2. radiation-light which is reflected from a surface.
3. radiation-light, which is diffusely scattered from a surface.
Always wear appropriate safety goggles and protect your skin when there is a chance of exposure to radiation from the laser.
Never look into the laser beam.

In general, the maximum permissible radiation exposure for the skin is several times greater than for the eye. Safety measures with regard to the radiation hazard are therefore mainly based on dangers for the eye.

A potential chemical hazard originates from interaction between the laser beam and an obstruction. The high irradiance could result in the liberation of hazardous fumes and gases. In addition, the heat generated is sufficient to ignite many materials.

Not only is the direct laser beam hazardous, but unchecked reflections of laser light also constitute a potential hazard. This risk is excluded if the laser beam is contained within a protective enclosure. Protective measures must be taken, therefore, when personnel are working in an open beam situation (use of beam shielding and beam dump).

A0409LPX

3.2.1.2 High Voltage / Electric Energy

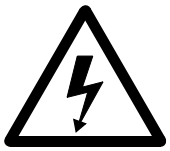

WARNING
Electrical hazards!
High voltages exceeding the Safety Extra Low Voltage levels (SELV) of 42 VAC or 60 VDC introduce the potential hazard of electric shock and might cause serious injuries by passing electricity through the body.

High voltages of up to 32 kV are generated in the LPX*Pro* laser device. As the equipment is provided with a protective housing, accidental contact with current-carrying conductors during normal operation is impossible. However, if an appropriate protective cover is removed, potentially lethal hazards exist in spite of the existence of the housing interlocks. With a protective cover removed, there is the risk of an electric shock whenever the mains supply is connected and the high voltage capacitors are charged. The capacitors in the laser device hold some joules at peaking voltages of up to 32 kV.

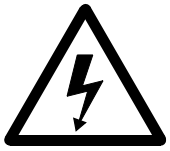

WARNING
Risk of electrocution!
Personnel should never open the laser device before the main power supply cable has been disconnected and the high voltage capacitors are completely discharged.

An electrical safety overview is given in Section 3.2.2.2 of this chapter (page 52), but reference should also be made to Section 3.2.3 (page 55) for an overall description of the system safeguards.

In addition to the above mentioned hazards, the HV switch used in the 1 kHz version (thyratron) generates ionizing radiation.

Radiation limit:	0.2 μSievert/h at 10 cm distance from laser device housing

This limit will not be exceeded if the LPX*Pro* is operated in the specified manner.

A0409LPX

3.2.1.3 Halogen Gas



WARNING!
Toxic gas hazard!
Careless handling of gas equipment can cause halogen gas to escape.
Avoid breathing in or skin contact with halogen gases.

The gas system of an excimer laser contains a mixture of 5% fluorine gas or 0.5% hydrogen chloride.

Halogens are extremely reactive and highly toxic gas which can cause severe chemical and thermal burns and in sufficient concentrations can cause death due to respiratory damage and pulmonary edema. They are characterized by an extremely stinging smell in very low concentrations. It is essential, therefore, that local safety regulations concerning the emission of chemical vapors must be strictly observed along with the recommendations made in this chapter and throughout this manual.

Depending upon the wavelength in which the laser is to be operated, the halogen is either fluorine or hydrogen chloride.

– Fluorine is in the form of a fluorine/helium mixture, ratio 95 % helium to 5 % fluorine. Fluorine is characterized by an extremely stinging smell in very low concentrations (0.1 ppm).

– Hydrogen chloride (HCl) is in the form of a hydrogen chloride/ hydrogen/helium mixture, ratio 94 % helium to 5 % hydrogen chloride to 1 % hydrogen.

Both are diluted further with other gases in the laser. However, they are still present in sufficient quantities in the gas supply to cause serious injury if not correctly handled and used.

The attention of the user is drawn, therefore, to the following maximum permitted exposure limits for fluorine and hydrogen chlorine. The permitted periods of exposure time with respect to these limits will, however, depend upon local safety regulations.

The MAK (maximum acceptable concentration level) values according to the German publication:

“Technische Regel des Ausschuß für Gefahrstoffe des Bundesministeriums für Arbeit und Soziales”
(TRGS 900, October 2000)

are as follows:

F_2 Limit: 0.16 mg/m^3

HCl Limit: 8 mg/m^3

A0409LPX

The possibility of over-pressure of the gas mixture containing fluorine or hydrogen chlorine creates potential hazards with the risk of leakage from the laser tube and gas pipes. Under normal operating conditions the overpressure is 2.5 bar (3.5 bar absolute). In the event of a leak occurring, the release of halogen gas constitutes the greatest hazard.

To remain below the MAK value of 0.16 mg/m^3 for fluorine even in a worse-case situation, unventilated rooms have to have an air volume of at least 100 m^3. When installaing the laser device in small rooms, make sure that there is an adequate air extraction system.

Further potential chemical hazards exist due to the formation of hydrofluoric or hydrochloric acid if the halogen gas comes into contact with water.

Hydrofluoric acid (in the form of KHF_2) and hydrochloric acid can also be formed in the halogen filters used in the system due to fluorine coming into contact with the hygroscopic components of the filter.

3.2.1.4 Ozone

The formation of ozone due to the interaction of ultra-violet light with oxygen constitutes a potential hazard.

NOTE
The Occupational Safety and Health Administration (OSHA) has set a permissible exposure limit (PEL) of 0.1 ppm (0.2 mg per cubic meter) for exposure to ozone.
Ozone is reported to have a pleasant, clover-like odor.
Refer to the International Chemical Safety Card for Ozone (ICSC: 0068) in the appendix to this manual for more precise health hazard information.

3.2.2 Personnel Safety

3.2.2.1 Ultra-violet Radiation Safety

An excimer laser emits high intensity pulsed ultraviolet radiation which constitutes a hazard to personnel in an open beam situation, e.g. during periods of servicing.

If alignment or maintenance work on Class IV laser equipment is necessary, everyone in the laser area must wear appropriate protective goggles or other appropriate protective eyewear. The mandatory protective goggles provide protection against direct radiation, reflected radiation and standard radiation (normal operating conditions) within the respective wavelength range.

A0409LPX

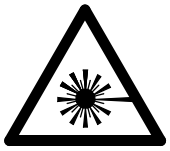

WARNING
Risk of serious injury!
Always wear protective goggles when there is a risk of exposure to radiation from the laser.

Before putting on the protective goggles, check them for any obvious defects. As the filter in the protective goggles provides protection for only a narrow band of wavelengths, make sure you are wearing the appropriate protective goggles for the laser device in question.

Check with your Laser Safety Officer or other safety personnel for guidance in selecting the appropriate goggles.

Contact a manufacturer of protective eyewear for information about appropriate protective eyewear. Specifications needed to select appropriate goggles are: wavelength, power, beam diameter, repetition rate and max. pulse duration (see separate Site Preparation manual for more information).

The ANSI (American National Standards Institute) standard for safe use of lasers requires that protective goggles which block the appropriate laser wavelength should be worn while operating or servicing class IV lasers. The goggles should be clearly labeled with an optical density and the specified wavelength.
To avoid confusion, these goggles should be kept separate from other safety glasses and personal protective equipment. Using the wrong type of goggles is dangerous. It can be worse to have improper eyewear and a false sense of security than to have no eyewear and take precautions based on the absence of protection. Even if you're wearing protective goggles, never looked directly into the beam; intense laser radiation is capable of destroying the protective filter.

A0409LPX

Optical Safety Guidelines

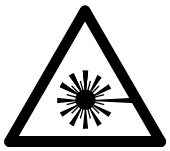

WARNING
Potential eye burns!
Only use the laser in accordance with its designated use. Safety interlocks are only to be defeated by authorized personnel.

The following guidelines describe some of the actions necessary to avoid injury caused by the laser beam. Always follow these guidelines and take additional precautions if necessary.

- When eyewear is necessary, make sure it has the proper optical density for the laser wavelength.
- All other personnel in the vicinity of the laser should also be ordered to wear protective eyewear. Only qualified personnel should be permitted to operate the laser.
- Never intentionally look directly into any laser beam.
- Avoid indirect viewing of direct or reflected laser radiation. Specular reflections (from reflective surfaces) can be as dangerous as the direct laser beam. Do not view the beam through optical instruments unless the optics are designed to filter the laser wavelength.
- Precautions must be taken to ensure that there are no reflecting objects in the path of the laser beam.
- Do not deviate from standard operating procedures when working with class IV laser equipment.
- Use lasers only in approved applications and locations. Take adequate precautions to prevent unauthorized personnel from entering the area where a class IV laser is operating. Do not use lasers around untrained personnel who may injure themselves inadvertently. Ensure that all personnel in the area observed proper safety precautions.
- Do not assume the laser system is aligned. Misaligned optics can cause unintended exposure.
- Report all incidents of exposure to your supervisor.
- Warning signs indicating the laser enclosed area should be clearly displayed with an additional warning light outside the door.
- Local and national regulations governing the safe use of lasers should be adhered to all times.

A0409LPX

Skin Safety Guidelines

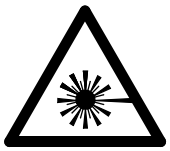

WARNING
Potential skin burns!
Direct and reflected laser radiation can burn exposed skin.
Only use the laser in accordance with its designated use. Safety interlocks are only to be defeated by authorized personnel.

- Although the skin can withstand a considerably higher radiation intensity than the eyes, tissue may be burned to a greater or lesser degree, depending on the radiation time and the irradiation intensity.
- Avoid contact between the skin and the beam, or specular reflections of the beam. Reflections of the beam may be as dangerous as the beam itself. Appropriate protective clothing should be worn to protect the skin whenever necessary.

Fire Safety Guidelines



WARNING
Fire hazards!
Class IV lasers are, by definition, fire hazards.
The laser beam can cause flammable materials to ignite or explode.
Always keep a fire extinguisher in the laser area in case a fire occurs

Because of the high output power from the class IV laser, a wide range of materials can be set on fire. Therefore, when the beam path is open, appropriate fire prevention measures should be taken:

- Combustible materials may be ignited by the laser beam or by electrical components inside the laser system. Flammable items must be isolated from the laser beam and from the laser system.
- Paper (circuit diagrams, leaflets, or even posters on the wall), curtains that are not coated with fire retardant, wooden panels or similar materials can be easily set on fire by direct or reflected laser radiation.
- Only beam stops made of non flammable materials (not asbestos!) should be used.
- Many fluids and solvents (e.g. cleaning agents used for maintenance) are combustible. The intense beam of the laser or a spark from an internal switch can ignite vapors from these materials. Prevent the laser beam from contacting flammable materials used in the laser area.
- Move containers of flammable materials as far from the laser system as possible and shield them from the beam with opaque materials. Under no circumstances should these solutions and vapors be placed in the beam path or near the system.

A0409LPX

3.2.2.2 Electrical Safety

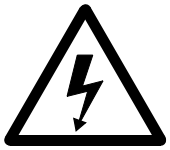

WARNING
Electrical hazards!
If the laser device is completely shut down for maintenance and repair work, it must be secured against inadvertent starting. Ensure that the electrical system is locked-out and tagged-out prior to servicing by locking the key switch of the laser device and tagging appropriate warning signs.

High voltages of up to 32 kV are generated within the laser equipment. The following precautions should be observed:

- Local safety regulations must always be strictly complied with.
- Switch off the laser device immediately with an interlock switch or Emergency Off (EMO) switch in case of an emergency, i.e. to prevent injury or serious material damage, or if trouble occurs in the electrical system (see Section 3.2.3.2 on page 57). Contact after use of the interlock switch or EMO switch appropriate maintenance personnel (e.g. safety officer)
- Work on the electrical system or equipment may only be carried out by a skilled electrician himself or by specially instructed personnel under the control and supervision of such electrician and in accordance with the applicable electrical engineering rules.
- Fault finding and troubleshooting in high voltage circuits shall only be performed by trained personnel.
- Necessary work on live parts and elements must be carried out only in the presence of a second person who can cut off the power supply in case of danger by actuating the emergency shut off or key switch.
  Secure the working area with a red and white safety chain and a warning sign.
  Use insulated tools only.
- If provided for in the regulations, the power supply to parts of the LPX*Pro* laser device on which inspection, maintenance and repair work is to be carried out must be cut off.
- Before starting any work, check the de-energized parts for the presence of power and ground or short circuit them in addition to insulating adjacent live parts and elements.
- Use only original fuses with the specified current rating.
- The electrical equipment of the LPX*Pro* laser device is to be inspected and checked at regular intervals. Defects such as loose connections or scorched cables must be rectified immediately.

A0409LPX

3.2.2.3 Gas Safety



WARNING!
Toxic hazards!
The gas system of an excimer laser contains a mixture of up to 5 % fluorine or 0.5 % hydrogen chloride.
Aviod inhalation of or skin contact with hydrogen gases.

The properties of compressed gases, such as pressure, diffusibility, make the handling of compressed gases hazardous. Laser gas mixtures invariably contain components which are corrosive, toxic and oxidizing. Therefore, extreme care must be taken when handling these mixtures.

As a general guide to safe working practices, the following precautions should be observed when working with gas equipment. Always follow these guidelines and take additional precautions if necessary.

- Gas protective equipment, such as masks, must be available at the entrance to the area where the laser is located.
  Ensure that a protective mask with a protective gas filter, or a complete breathing apparatus set, is placed in a clearly displayed and accessible part of the operating area.
- It is recommended that personnel work in pairs and within sight and sound of each other, although not necessarily in the same working area. Only trained and competent personnel should be permitted to handle halogen gas cylinders and regulators.
- Any equipment to be used for halogen gas mixture servicing should be thoroughly cleaned, degreased and dried before use, then treated with increasing concentrations of halogen gas so that any impurities can be burned off without the risk of the equipment catching fire.
- Any equipment that has contained halogen must be thoroughly purged with helium or argon and evacuated prior to opening or refilling.
- Due to the possibility of over-pressure of the gas mixture containing halogens, potential hazards exist due to the risk of leakage of the laser tube and gas pipes. The most vulnerable part is the window. Under normal operating conditions the pressure is 3.8 bar. The equipment must be used such that the beam exit is not directed at personnel. In the event of a leak occurring, the release of halogen gas constitutes the greatest hazard.
- The LPX*Pro* laser has an externally connected vacuum pump. This means that there is the potential risk of a gas leak when evacuating the gas mixture from the excimer laser. To reduce the risk of a hazardous concentration of halogen gas, a halogen sensor and an extraction system should, therefore, be installed in the area of the vacuum pump.

A0409LPX

- Avoid repeated bending and excessive vibration of gas piping and equipment as this can result in flaking of the protective halide film and rupturing of the metal. This could lead to the occurrence of a fluorine metal fire. Flaking of the protective film can also cause dust to foul the valves.
- All areas containing pressurized halogen gas mixtures should be inspected for leaks periodically (weekly). In the event of a leak occurring, the release of halogen gas constitutes the greatest hazard.
- All leaks should be repaired immediately, but not while the system contains halogen.

  With fluorine: ammonia vapor expelled from a squeeze bottle containing ammonium hydroxide may be used to detect leaks at suspected points.
  Filter paper moistened with potassium iodide solution is a very sensitive means of detecting fluorine in concentrations as low as approximately 25 parts per million. The potassium iodide paper should be held with the aid of 18 to 24 inch long tongs or forceps, and will darken and turn black when fluorine is present. Fluorine odor is sufficiently strong to be detectable in very low concentrations (at 0.14 parts per million). Fluorine will also fume readily in air.
- Adequate ventilation is essential. See Section 4.6 on page 77 for the specifications of the required air flow. There should be a minimum of at least 10 air changes per hour for enclosed spaces.



WARNING
Toxic hazard!
Ensure that the laser is ventilated into an appropriate exhaust. Make sure that the exhaust of the laser is not connected to the duct system of systems used for the processing of breathing air (e. g. air conditioning or ventilating systems).

- Ozone can be generated by ultra-violet radiation (in particular with ArF at 193 nm). This gas should be removed with a proper air exhaust or by flushing the beam path with Nitrogen or Argon.
- Always wear protective gloves when changing halogen filters as they are hygroscopic and contain oxidizing agents.
- Gas cylinder valves should be closed except while filling the laser, or when running the laser in the constant energy mode (EGY Const.).
- As the premix gas contains halogen, a needle valve or cut-off valve should be installed in the fluorine premix gas line. The additional valve is to be located near the gas cylinder to protect the gas line and pressure regulator against corrosion and provide additional gas protection. Do not solely rely on the main gas cylinder valve to provide adequate protection.

A0409LPX

- The pressure regulator, situated between the external gas cylinder and the laser, should be checked regularly. The maximum permitted value while cylinders are opened is 5.0 bar (abs.) respectively 7.0 bar (abs.) to operate the halogen source's pilot valve.

3.2.2.4 Pressure Vessel Safety

Gas pressures of up to 3.8 bar (abs.) are permitted in the laser tube. If pressure rises above that, a built-in safety valve releases the overpressure via the halogen filter into the exhaust. The following precautions should be observed:

- The laser should only be operated with the housing closed.
- In accordance with the European Pressure Equipment Directive, Lambda Physik recommends to have the laser tube checked by a specialist every five years. Call Lambda Physik Service for further information.

3.2.3 Constructive Safety Features

The laser device is equipped with the following constructional safety features:

3.2.3.1 Radiation Safety Features

- Appropriate Class IV label affixed to laser device enclosure (see Section 3.3 of this manual).
- All parts of the laser where laser radiation may possibly escape are marked with the appropriate adhesive danger signs (according to IEC 825).
- All service panels are equipped with interlock switches which shut off the high voltage if a panel is opened during operation.

A0409LPX

- A white Laser ON warning light (see Figure 25, A) is located in a prominent position on top of the laser head near to the beam exit aperture. This warning light illuminates when the laser is emitting radiation.

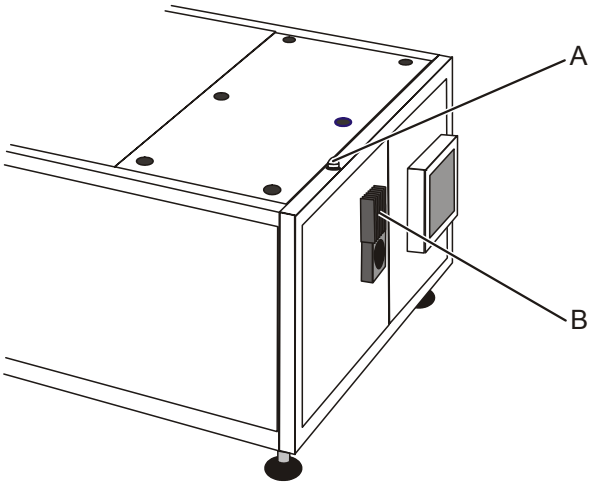

Figure 25: *Laser radiation warning light and shutter*

- Each beam exit from the laser housing can be closed by a manually operated beam shutter (see Figure 25, B).
- LPX*Pro* laser devices are provided with a connector (”Remote”) on the connection panel of the HV power supply module. This enables connection to external electrical circuits for a warning light and one or more interlock switches (the appropriate plug is included in the service box).

  The warning light signals that the laser is operating and, therefore, warns of the risk of laser radiation.

  The interlock switch shuts down the laser externally, for instance if a door connected with the switch is opened.

NOTE
The Remote Interlock only switches off the high voltage. After closing the door switch, the laser can be restarted. To prevent the laser from being simply restarted after activation of a door contact, the contact has to be integrated in an external EMERGENCY OFF circuit that interrupts the mains voltage supply to the laser device. The specifications of the Remote Interlock are indicated in Section 4.7.1 on page 78.

- The gas handling module is monitored by a watchdog. This immediately indicates any malfunction in the module.

A0409LPX

3.2.3.2 Electrical Safety Features

The following safety features protect the user from the potentially lethal hazards associated with high voltage power sources.

- The main switch (see Figure 26, A) can be used as an Emergency Off (EMO) device according to IEC/EN 60204-1. It has fast acting magnetic circuit breakers with at least 10 kA interrupting capacity.

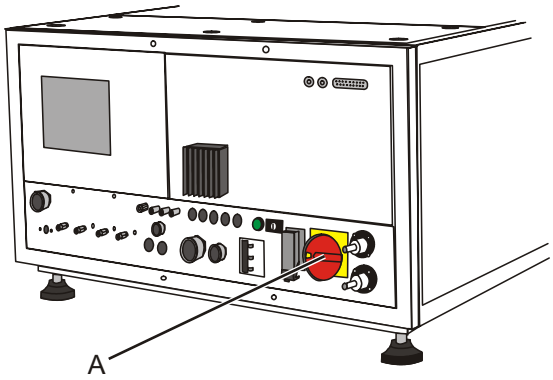

Figure 26: *Main switch with EMO function*

- The main switch is designed to enable the insertion of a lockout device that corresponds with OSHA 29 CFR 1910.147 when the switch is set to OFF. This ensures that the laser device can be locked out to perform servicing or maintenance.
- The “Remote” connector on the connection panel of the HV power supply module is configured so that the contacts have to be closed to enable the HV power supply. If the contacts are opened during laser operation, the HV power supply will be immediately shut down.
- Opening a service panel triggers an interlock switch that shuts off the high voltage and, consequently, the laser radiation.
- All potentially lethal voltages are contained in fully protected and grounded enclosures.
- A fully enclosed laser housing shields the surroundings from the ionizing radiation. The emission of ionizing radiation has been checked by the official institute in Germany responsible for radiation control (Physikalisch Technische Bundesanstalt - PTB). No radiation beyond background radiation was detected with the covers closed.
- High voltage warning labels are prominently displayed on all three high voltage modules: the external high voltage power supply , the gas processor power supply, and the high voltage circuitry.
- For servicing, the capacitors can be discharged to ground through a safety stick.

A0409LPX

- All AC power wiring is UL- or VDE-recognized and rated at 600 V. Brown or black are used for line phases, yellow or yellow-green is used for ground and blue or white for neutral (depending on version).
- Each AC power module has a yellow or yellow-green grounding conductor. All power connectors have grounding pins that make first and break last.
- Circuit breakers are used to provide branch circuit protection against low level faults.
- AC power and signal lines are never combined in the same connector.
- All external low voltage lines (24 V) correspond with the VDE 0551 standard.

3.2.3.3 Pressure and Gas Handling Safety Features

The Lambda Physik Excimer Laser incorporates the following pressure and gas handling features:

- The pressure chamber is designed in accordance with the European “Pressure Equipment Directive” (97/23/EEC). Every pressure vessel is tested according to the European “Pressure Equipment Directive” (97/23/EEC).
- All utilities connections are located at one end of the laser.
- The main enclosure is fully interlocked.
- All gas fittings are 6 mm Gyrolok™.
- A powerful ventilation system causes continuous underpressure in the tube chamber during laser operation. This prevents toxic gas from escaping into the ambient air in case of a leak.
- The exhaust enclosure is designed to ensure ventilation of all components.

A0409LPX

3.2.3.4 Fire Safety Features

The fire safety features designed into Lambda lasers eliminate the use of materials which are combustible or produce toxic vapors as well as preventing flames from spreading or burning materials from dripping. The design incorporates the following specific fire safety features:

- No easily inflammable materials touch potential sources of ignition or hot surfaces.
- Except for electrical wire insulation polyvinyl chloride (PVC) is not used.
- No ventilation holes in fire break enclosures are in excess of 5 mm (0.20") in diameter. Hole arrays are used as required.
- Material meeting or exceeding UL 94-V1 is used.

3.2.3.5 Mechanical Safety Features

Mechanical safety design provides protection against any hazards which could cause physical injury or burns. Specific mechanical safety features are listed below:

- Exposed corners are radiused.
- Air fans have grill guards with less than 6.4 mm (0.25 in).
- No high temperature components are accessible to touch.
- The laser center of gravity is centrally located within the enclosure to minimize the tipping hazard.

A0409LPX

3.2.3.6 General Safety Features

The LPX*Pro* laser device incorporates the following general safety features:

- Key-switch controlled laser operation.
  The laser device can only be switched on with the key-switch (see Figure 27, B). This prevents inadvertent or unauthorized starting of the laser. It cannot be operated with the key in the OFF position and the key cannot be removed in the ON position.

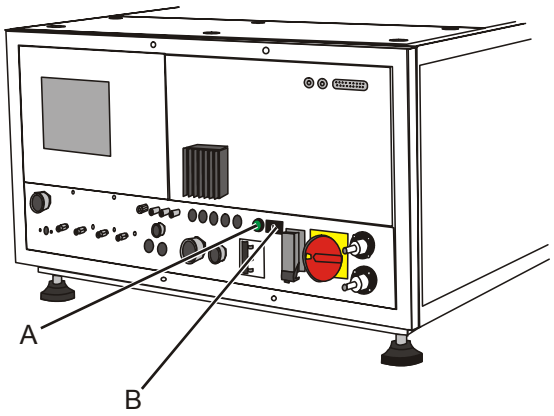

Figure 27: *Mains voltage warning light and key switch*

- Warning lights:
  - Laser radiation warning light (see Figure 25, A on page 56), illuminates (white) when laser radiation is being emitted or can be emitted.
  - Mains voltage warning light (see Figure 27, A), illuminates (green) when mains voltage is applied to the laser device.
- No polychlorinated biphenyl (PCB) is used.
- No asbestos is used.

A0409LPX

3.3 Labels

This section describes the location and purpose of the safety-relevant labels attached to the LPX*Pro* excimer laser device.

The labels are grouped in this section according to the laser device module to which they are attached.

– Section 3.3.1 indicates the location and describes the labels on the laser head.

– Section 3.3.2 indicates the location and describes the labels on the HV power supply.



WARNING
Risk of injury!
Misuse or improper handling of the laser device can cause serious or, in certain situations, even lethal injuries.
Never put the laser device into operation if the labeling is incomplete. Immediately replace the missing label(s) or inform Lambda Physik of their absence.

Ensure that all warning labels are affixed to the laser device according to the plans given in this chapter.

NOTE
To simplify the ordering of labels, the appropriate Lamdba Physik part number is indicated behind the position number of the corresponding label.

A0409LPX

3.3.1 Laser Head

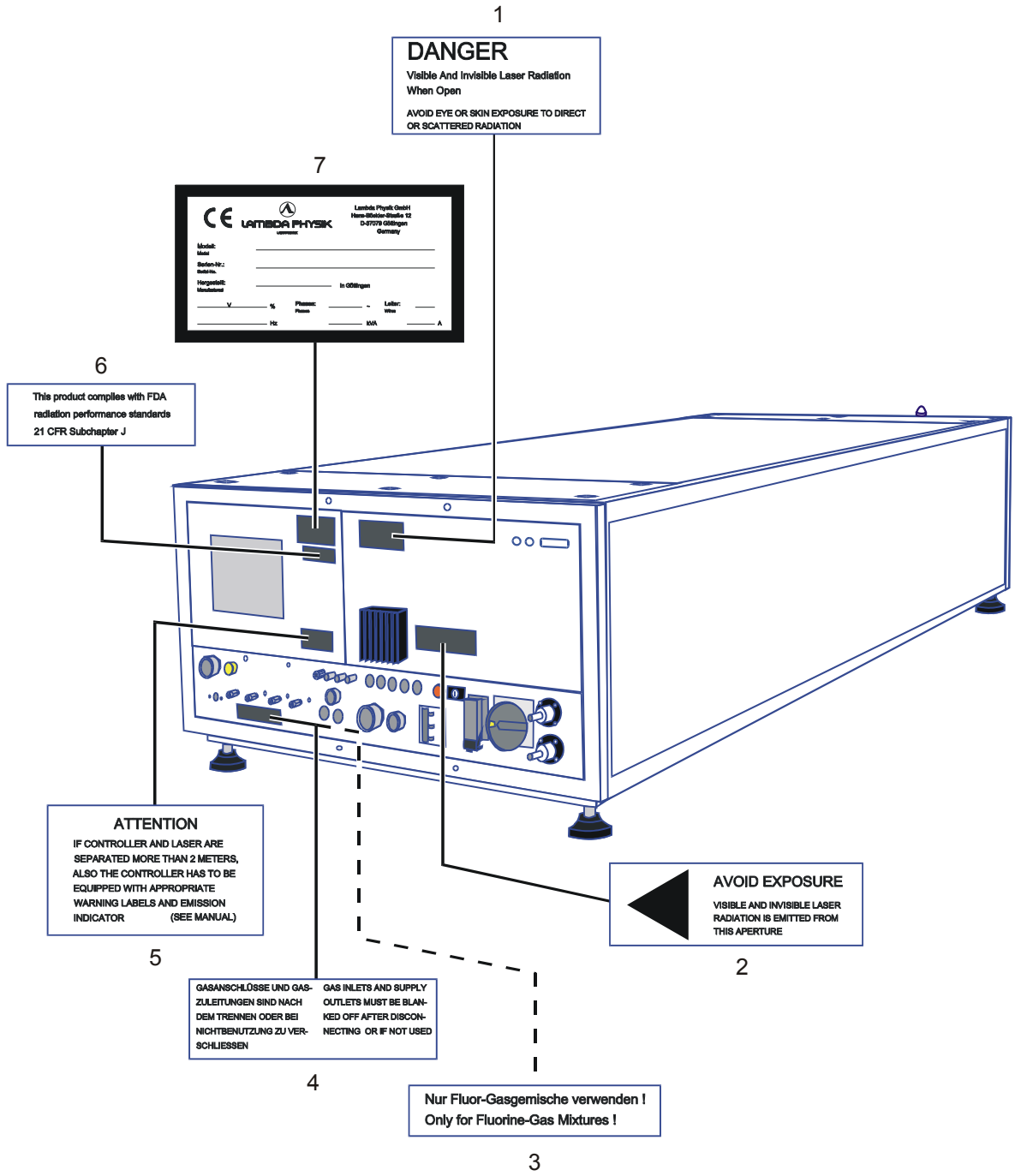

Figure 28: *Safety labels on rear of LPX$\mathcal{P}ro$ laser head*

A0409LPX

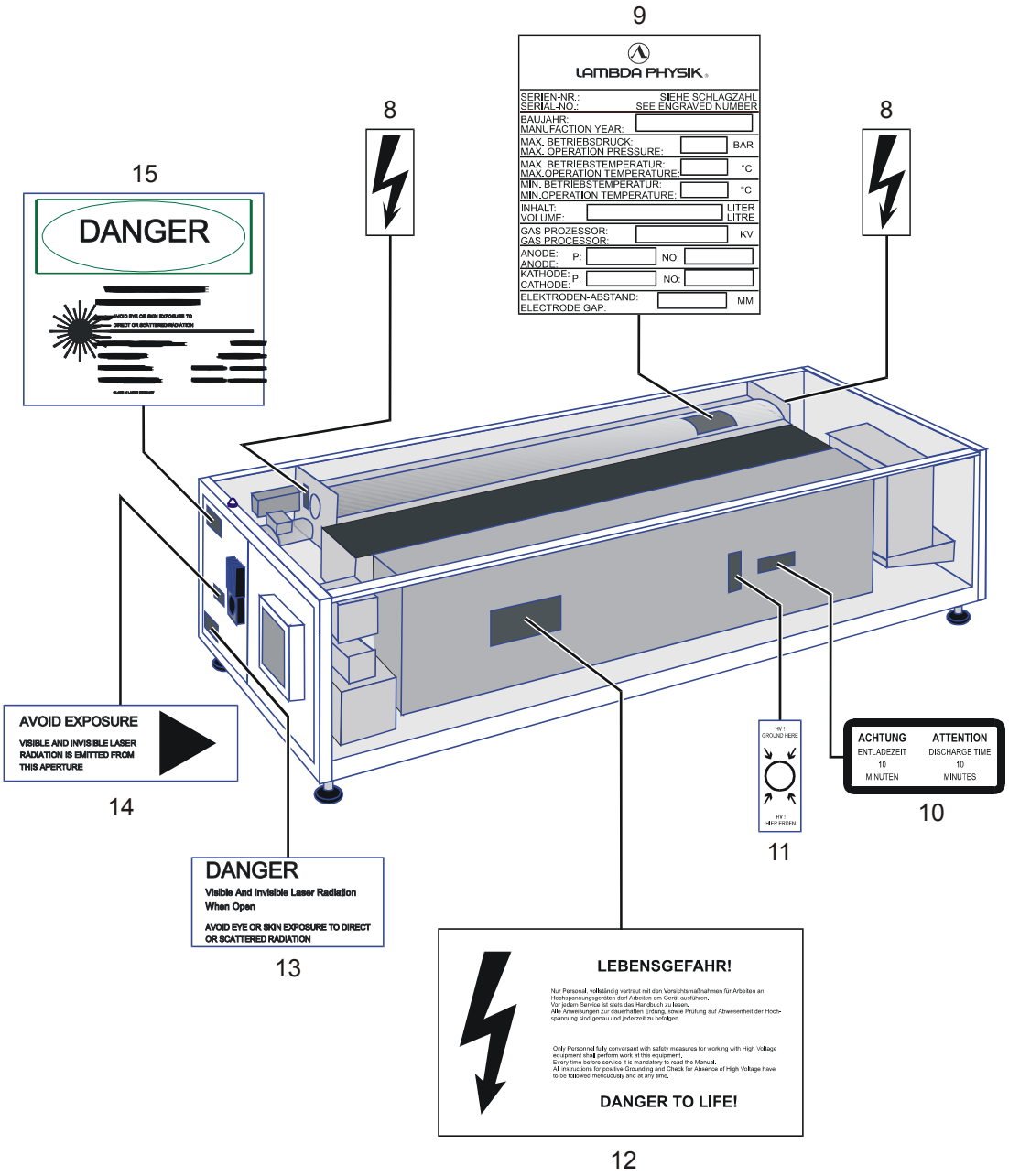

Figure 29: *Safety labels on front and inside of LPX$\mathcal{P}ro$ laser head*

A0409LPX

Pos. 1 (# 904025)
Label indicating a protective cover. Removal or displacement of the cover on or near to which the label is affixed could permit human access to Class IV laser radiation.

Pos. 2 (# 901031)
Beam output safety sign. Label indicating that laser radiation is emitted from the aperture to the left of the label.

Pos. 3 (# 906446)
This label is only attached to fluorine versions of the LPX*Pro*. It indicates that no gas mixtures other than fluorine gas mixtures are to be used.

Pos. 4 (# 905384)
Label indicating that unused gas connections have to be sealed off.

Pos. 5 (# 90512101)
Label complying with IEC 825 that indicates that when operating the laser device from a remote computer located more than 2 m away, the remote computer also has to be equipped with the locally required labels warning of laser radiation.

Pos. 6 (# 90103401)
Label to certify that the laser complies with FDA radiation performance standards.

Pos. 7 (# 90574302)
Laser identification plate indicating the name and address of the manufacturer, the place, month and year of manufacture, the laser device serial number and the specifications of the mains connection.

Pos. 8 (# 900641)
Label warning of the risk of electrical shock or even electrocution if the module(s) and/or component(s) situated near to or behind the cover to which the label is affixed are touched or treated improperly.
Only correspondingly qualified and authorized personnel may open and work on the indicated module(s) and/or component(s)!

Pos. 9 (# 904489)
Laser tube identification label indicating the serial number, year of manufacture and technical data relating to the laser tube.

Pos. 10 (# 16.00.26.039-1)
Label indicating the usual period of time required for the capacitors to discharge.

Pos. 11 (# 902823)
Label indicating the location in which the capacitor grounding stick (safety stick) is to be inserted.

Pos. 12 (# 900837)
Label warning of direct access to high voltages when shielding is removed. Only correspondingly qualified and authorized personnel may open and work on the module to which the label is affixed!

Pos. 13 (# 90103101)
Beam output safety sign. Label indicating that laser radiation is emitted from the aperture to the right of the label.

A0409LPX

Pos. 14 (# 901032)
Warning label according to CDRH. This contains a laser radiation warning and device-specific laser data. The information indicated on this label is important for the choice of laser protective eyewear:

Model	Power [W]	Energy [J]	Dauer [ns]	Wavelength [nm]
LPX*Pro* 210	125	1.0	10 - 50	157 - 800
LPX*Pro* 220	125	0.8	10 - 50	157 - 800
LPX*Pro* 305	200	1.8	10 - 50	157 - 800

3.3.2 HV Power Supply

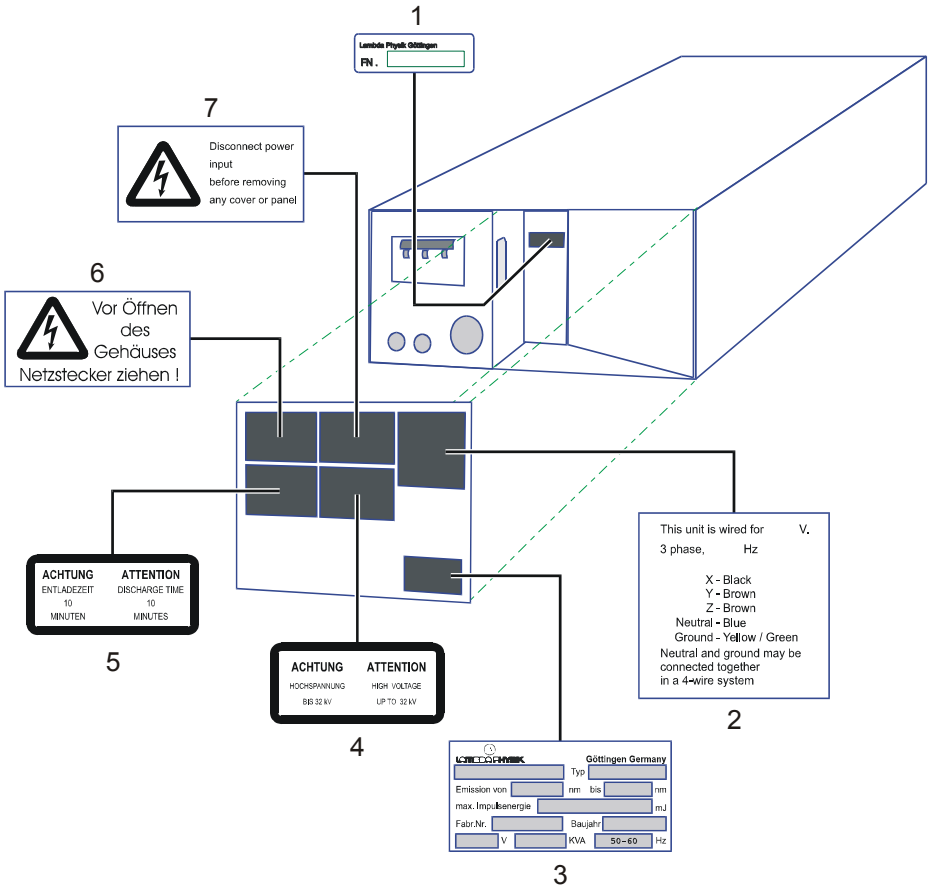

Figure 30: *Safety labels on PU3000P HV power supply module*

Pos. 1 (# 900663)
Label indicating the fabrication number (FN) of the HV power supply module.

A0409LPX

Pos. 2 (# 903692)
Label indicating the wiring configuration of the HV power supply module.

Pos. 3 (# 901030)
Identification label for the HV power supply module indicating model, serial number, year of manufacture and principal technical data (emission range, max. pulse energy, electrical connection of HV power supply module).

Pos. 4 (# 16.00.26.040)
Label warning of the voltage level present within HV power supply module.

Pos. 5 (# 16.00.26.039-1)
Label indicating the usual period of time required for the capacitors to discharge.

Pos. 6 (# 903069)
German language version of label # 903070.

Pos. 6 (# 903070)
Label warning of risk of electric shock and stipulating disconnection from the mains supply prior to removing any cover from the HV power supply.

A0409LPX

4 SPECIFICATIONS, REQUIREMENTS AND ACCESSORIES

This section requires the specifications required to integrate the LPX*Pro* into a laser assembly or laser unit.

Due to Lambda Physik's policy of continuous optimization of their laser devices, the data contained in this chapter is subject to variation.

Should information on separate sheets (e.g. laser data sheets) attached to or provided together with this Instruction Manual contradict the information in this chapter, the information on the separate data sheets has priority.

A0409LPX

4.1 Laser Beam Parameters

4.1.1 LPX*Pro* 200 Series

	Type of Laser	ArF	KrF	XeCl	XeF	Units
Wavelength		193	248	308	351	nm
CDRH Class.	LPX*Pro* 200	IV	IV	IV	IV	-
Max. Pulse Energy[1)]	LPX*Pro* 210 (F)	450	700		400	mJ
	LPX*Pro* 210 (XeCl)			400		mJ
	LPX*Pro* 220 (F)	300	500		200	mJ
	LPX*Pro* 220 (XeCl)			250		mJ
Max. Rep. Rate	LPX*Pro* 210	100	100	100	100	Hz
	LPX*Pro* 220	200	200	200	200	Hz
Max. Average Power[2)]	LPX*Pro* 210 (F)	35	65		35	W
	LPX*Pro* 210 (XeCl)			38		W
	LPX*Pro* 220 (F)	50	80		35	W
	LPX*Pro* 220 (XeCl)			45		W
Pulse Duration (nominal)	LPX*Pro* 210	20	25	28	25	ns, FWHM
	LPX*Pro* 220	15	20	18	18	ns, FWHM
Pulse-to-Pulse Stability[3)]	LPX*Pro* 200 series	2.5	1.5	2.0	1.5	± %
Beam Dimensions[4)]	LPX*Pro* 200 series	5-12 × 23	5-12 × 23	5-12 × 23	5-12 × 23	mm^2 (V × H)
Beam Divergence[4)]	LPX*Pro* 200 series	1 × 3	1 × 3	1 × 3	1 × 3	mrad (V × H)

1) measured at low repetition rate (≤ 10 Hz)
2) measured at max. repetition rate
3) 1 sigma, measured at low repetition rate (≤ 10 Hz)
4) typical value, FWHM

A0409LPX

4.1.2 LPX*Pro* 300 Series

	Type of Laser	ArF	KrF	XeCl	XeF	Units
Wavelength		193	248	308	351	nm
CDRH Class.	LPX*Pro* 300 series	IV	IV	IV	IV	-
Max. Pulse Energy[1)]	LPX*Pro* 305 (F)	650	1200		400	mJ
	LPX*Pro* 305 (XeCl)			400		mJ
Max. Rep. Rate	LPX*Pro* 305	50	50	50	50	Hz
Max. Average Power[2)]	LPX*Pro* 305 (F)	25	50		15	W
	LPX*Pro* 305 (XeCl)			15		W
Pulse Duration (typical)	LPX*Pro* 305	2	1.5	2.0	1.5	ns, FWHM
Pulse-to-Pulse Stability[3)]	LPX*Pro* 305	2.5	1.5	2.0	1.5	± %
Beam Dimensions[4)]	LPX*Pro* 305	10-15 × 30	10-15 × 30	10-15 × 30	10-15 × 30	mm^2 (V × H)
Beam Divergence[4)]	LPX*Pro* 305	1 × 3	1 × 3	1 × 3	1 × 3	mrad (V × H)

1) measured at low repetition rate (≤ 10 Hz)

2) measured at max. repetition rate

3) 1 sigma, measured at low repetition rate (≤ 10 Hz)

4) typical value, FWHM

A0409LPX

4.2 Physical Dimensions

4.2.1 Laser Head

Size (l × h × w)	1966 mm × 473.5 (+40[a]) mm × 800 mm / 77.4" × 18.6 (+1.57)" × 31.5"
Weight	
- LPX 200:	270 kg / 595 lb
- LPX 305:	300 kg / 661 lb

a. each laser head is equipped with height-adjustable feet

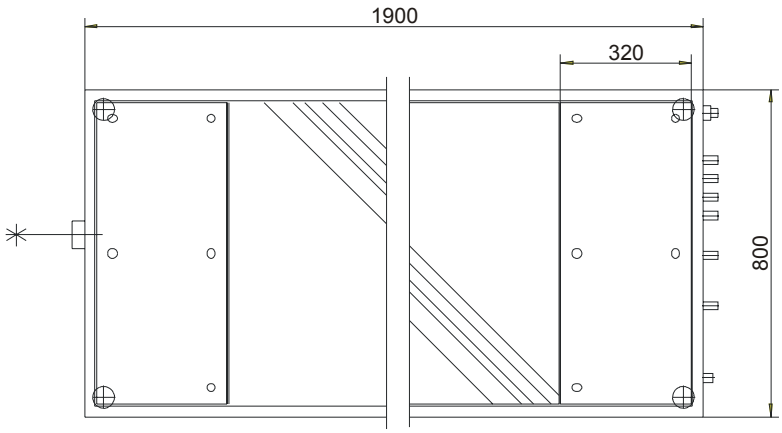

Figure 31: *Dimensions of laser head (top)*

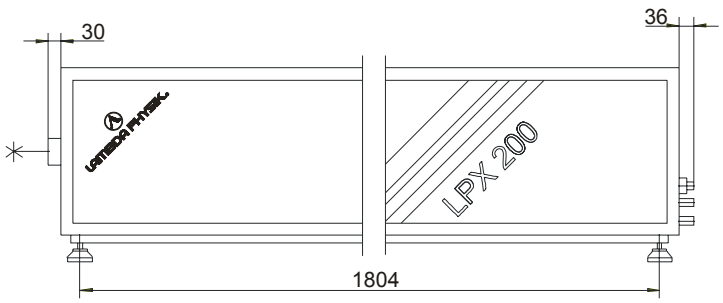

Figure 32: *Dimensions of laser head (side)*

A0409LPX

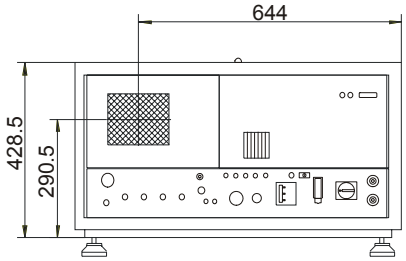

Figure 33: *Dimensions of laser head (rear)*

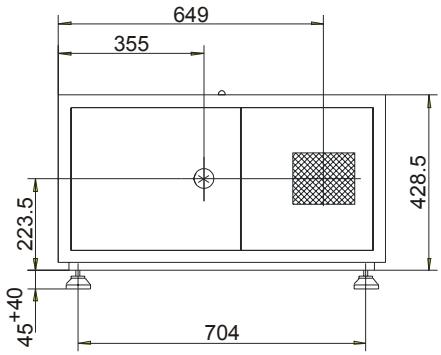

Figure 34: *Dimensions of laser head (front)*

4.2.2 HV Power Supply Module

Size (l × h × w)	750 mm × 460 mm × 185 mm / 29.5" × 18.1" × 7.3"
Weight	50 kg / 110 lb

4.2.3 Vacuum Pump

Size (l × h × w)	230 mm × 450 mm × 240 mm / 9.1" × 20.9" × 9.4"
Height with filter	530 mm / 20.9"
Weight	23 kg / 51 lb

A0409LPX

4.3 Gases

The active medium in an excimer laser is a mixture of a rare gas, a halogen gas and a buffer gas. The gases are mixed in the laser itself. The gas mixture needed depends upon the wavelength in which the laser is to be operated:

Gas Mixture	Wavelength
F_2 in He, Inert (He)	157 nm
Ar, F_2 in He, Buffer (Ne)	193 nm
Kr, F_2 in He, Buffer (Ne)	248 nm
Xe, HCl and H_2 in He, Buffer (Ne)	308 nm
Xe, F_2 in He, Buffer (Ne)	351 nm

As standard, the LPX*Pro* is optimized for fluorine operation at the wavelengths 193 nm, 248 nm and 351 nm. Optionally available is a multigas laser tube which additionally enables XeCl operation at a wavelength of 308 nm. Ensure that the appropriate gas cylinders are available for the wavelength that the laser is to be operated at .

NOTE
A) Only use gas cylinders with a remaining pressure of more than 10 bar (abs.) to ensure that there is an adequate gas supply to perform gas actions. Depending on the configuration of the gas supply system, pressures below 20 bar (abs.) may be critical.
B) Lambda Physik recommends using halogen / premix gas cylinders for max. one year and all other gas cylinders for max. two years.

All gas valves on the laser device allow supply from separate gas cylinders. In addition premix gases or the optional halogen source can be used. The halogen source is the controlled by the laser.

NOTE
A) In addition to the laser gas mixture we strongly recommend a helium and a neon gas cylinder even if they are not needed for the gas mixture. The gas cylinders are necessary to purge the tube and the gas lines (helium) and to make the laser device transportable and storable (neon).
B) At wavelengths less than 233 nm, nitrogen is required to purge the beam path and optics modules.

A halogen filter is built into the laser and will fully absorb all of the halogen exhausted during the filling procedures. No toxic gases will leave the laser device. The halogen filter filling ratio is monitored by the laser control software. The filter should be exchanged after up to 30 gas fills or on a yearly basis, whichever comes first.

For low duty cycle applications that consistently use the same laser wavelength, operation with a premix gas cylinder is recommended. In this case one cylinder of premix gas and another one with inert gas (helium) for flushing is required.

A0409LPX

Fluorine

Type of gas	5 % F_2 / 95 % He mix
Purity of Helium	99.995 % or higher
Purity of Fluorine	for Excimer laser, HF-free
Pressure regulator	3.5 bar to 5.0 bar (abs.)
Flow	0.3 l/s to 3.0 l/s
Recommended cylinder size	10 l, 150 bar (2100 psi)

Hydrogen chloride

Type of gas	5 % HCl / 1 % H_2 in He
Purity	99.995 % oder höher
Pressure regulator	3.5 bar to 5.0 bar (abs.)
Flow	0.3 l/s to 3.0 l/s
Recommended cylinder size	10 l, 100 bar (1400 psi)

Argon

Purity	99.995 % or higherr
Pressure regulator	3.5 bar to 5.0 bar (abs.)
Flows	0.8 l/s to 3.0 l/s
Recommended cylinder size	50 l, 200 bar (2800 psi)

Krypton

Purity	99.99 % or higher
Pressure regulator	3.5 bar to 5.0 bar (abs.)
Flow	0.8 l/s to 3.0 l/s
Recommended cylinder size	10 l, 100 bar (1400 psi)

Xenon

Purity	99.99 % or higher
Pressure regulator	3.5 bar to 5.0 bar (abs.)
Flow	0.8 l/s to 3.0 l/s
Recommended cylinder size	2.5 l, 50 bar (700 psi)

A0409LPX

Neon

Purity	99.995 % or higher
Pressure regulator	3.5 bar to 5.0 bar (abs.) 6.5 bar to 7.0 bar (abs.) for the halogen source
Flow	0.8 l/s to 3.0 l/s
Recommended cylinder size	200 l, 200 bar (2800 psi)

Helium (flushing gas for the laser tube)

Purity	99.995 %
Pressure regulator	3.5 bar to 5.0 bar (abs.) 6.5 bar to 7.0 bar (abs.) for the halogen source
Flow	0.8 l/s to 3.0 l/s
Recommended cylinder size	200 l, 200 bar (2800 psi)

Nitrogen (purge gas for the beam path)

Purity	99.999 % (boil off)
Pressure regulator	2.0 bar bis 2.5 bar (abs.) 6.5 bar bis 7.0 bar (abs.) for the halogen source
Flow	1.0 l/s to12.0 l/s
Recommended cylinder size	50 l, 200 bar (2800 psi)

NOTE
The gas connections are described in Section 4.8.3 on page 83.

A0409LPX

4.4 Power Supply



CAUTION
Risk of damaging laser device!
Improper installation can cause serious mains supply line damage.
The mains supply line must be installed with strain-relief in a cable channel.

The laser device requires a permanently connected mains supply. The specifications of the electrical connection are listed below.

Input voltage	400 VAC ±10 % or 208 VAC ±10 %
Line frequency	50/60 Hz switchable
Phases	3
LPX 200 series	
Apparent load	8 kVA
Current:	
- 400 V power supply	12 A
- 208 V power supply	24 A
LPX 305	
Apparent load	6 kVA
Current:	
- 400 V power supply	9 A
- 208 V power supply	18 A

NOTE
The electrical connections are described in Section 4.8.5 on page 85.

A0409LPX

4.5 Cooling Water

LPX*Pro* lasers are water-cooled.



CAUTION
Risk of corrosion of the laser heat exchange!
Do not use deionized or distilled water.

NOTE
A) Suspended particles in the cooling water can cause sedimentation in or even clog the cooling circuit. We, therefore, strongly recommend the installation of a particle filter in the external water supply line.
B) More than 2000 liters (500 gallons) of water are consumed a day during intensive use of the excimer laser. For cost as well as environmental reasons, we recommend the use of a closed circuit colling water system with a water chiller.

Temperature Range (at water inlet)	10 °C to 20 °C for 100 % duty cycle
Flow rate:	
- LPX*Pro* 200 series	approx. 4 l/min[a]
- LPX*Pro* 305	approx. 6 l/min[a]
pH-value	6 to 9
Pressure	2 to 4 bar (abs.)
Heat transfer to water	≤ 3 kW
Connectors	½“ (outer diameter) pipe

a. depending on water temperature

NOTE
The water connections are described in Section 4.8.4 on page 84.

A0409LPX

4.6 Air Intake / Exhaust

The LPX*Pro* has one air intake and one air exhaust. The intake air for the laser is the ambient air. Under normal operating conditions, the exhaust air does not contain any toxic gases or by-products. Nevertheless, certain failure scenarios may cause the exhaust air to contain a small concentration of halogen gas or ozone and should, therefore, be treated accordingly. Effective protection is only guaranteed if the exhaust hose is guided to an appropriate industrial ventilation system.



WARNING
Toxic gas hazard!
Lead the exhaust of the laser and vacuum pump into an appropriate industrial ventilation system.
Make sure that the exhaust of the laser and vacuum pump is not connected to the ducting of systems used for the processing of breathing air (e.g. air conditioning or ventilating systems).

Exhaust flow rate	
- Recommended	≈ 200 m^3/h
- Minimum	≈ 160 m^3/h
- Maximum	≈ 250 m^3/h
Heat transfer to exhaust	<1 kW
Hose diameter	150 mm

NOTE
The location of the air intake and exhaust is indicated in Section 4.8.6 on page 86.

A0409LPX

4.7 Signal Lines

4.7.1 External Interlock and Warning Lamp

The number and location of external interlock switches has to be determined in accordance with safety requirements at the laser installation site. Each installation has a unique configuration.

The external interlock switches are connected to the laser through a remote interlock socket, situated on the connection side of the HV power supply module.

The plug is a 4 pin EMI-filtered round plug. Pins 1 and 4 serve as connection for an external laser radiation lamp (24 VAC/100 mA max.) Pins 2 + 3 serve as connection for the remote interlock circuit (see Figure 35).

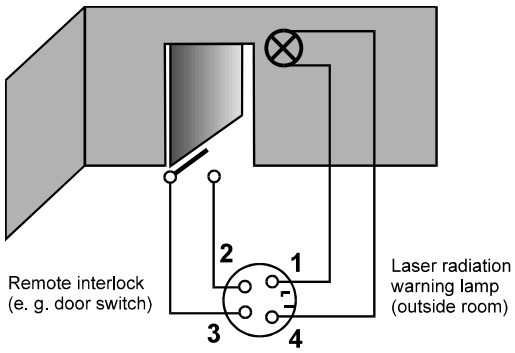

Figure 35: *Remote Socket*

To enable laser operation it is necessary to short circuit pin 2 and 3 through a bridge (the appropriate plug is enclosed in your tool case) or an external switch. If not, laser high voltage is disabled immediately with an interlock message.

A0409LPX

4.7.2 Serial Interface (RS232C)

The laser device can be controlled by an external PC. Information is transferred between the external computer system and the communication interface through a RS232 interface. The data format for information transfer is:

data bits	**8**
parity	**OFF**
stop bits	**1**
baud rate	**9600**

The connector at the communication interface is a 25 pole D-type female, the connector at the handheld keypad is a 9 pole D-type male connector with M3 lockings.

9 pole D-type male connector:

PIN	Signal	Specific.	Descripion
2	RXD	I, RS232	Receive Data
3	TXD	O, RS232	Transmit Data
5	GND		Signal Ground
9	+ 15 V from communication interface		

25 pole D-type female connector:

PIN	Signal	Specific.	Descripion
1	NC		shield
2	TXD	O, RS232	Transmit Data
3	RXD	I, RS232	Receive Data
7	GND		Signal Ground
9	+ 15 V for handheld keypad		

All signals are compatible to the standard RS232 levels:+5 to +15V for SPACE and -5 to -15V for MARK.

A0409LPX

4.7.3 External Trigger In

LPX*Pro* lasers can be triggered from an external source (trigger generator). This source is connected to the EXT. TRIG. socket at the rear of the laser device. The specifications for this input are as follows:

Voltage	+3.3 V ... +5 V
Impedance	> 5kΩ
Duration	≥ 15 µs
Triggered on positive slope	
Connector	BNC

4.7.4 Sync. Out Signal

A trigger pulse is sent to the SYNC.OUT BNC socket at the rear of the laser device at the same time that the trigger generator sends a pulse to fire the laser beam.

Voltage	+3.3 V ... +5 V
Impedance	≥ 1 kΩ
Duration	15 µs
Positive slope	
Connector	BNC

A0409LPX

4.8 Connections and Space Requirements

This section specifies the connections and space required for the installation of the laser device

4.8.1 Beam Exit Position

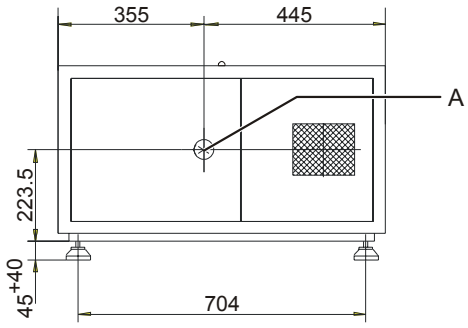

Figure 36: *Beam exit position*

The beam exit position is indicated in Figure 36, A.

The vertical position is 268.5 mm (+ 40 mm) above floor level.

The horizontal position is 355 mm from the left edge and 445 mm from the right edge of the laser device.

A0409LPX

4.8.2 Foot Configuration

The laser device is equipped with four feet. To compensate for permissible variations in the flatness of the floor, the four feet are height-adjustable. The adjustment range of each foot is indicated in Figure 37.

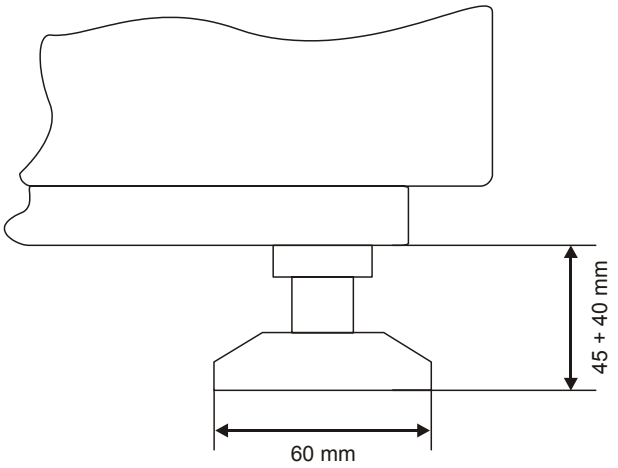

Figure 37: *Foot configuration*

The location of the feet on the laser head is indicated in Figure 38.

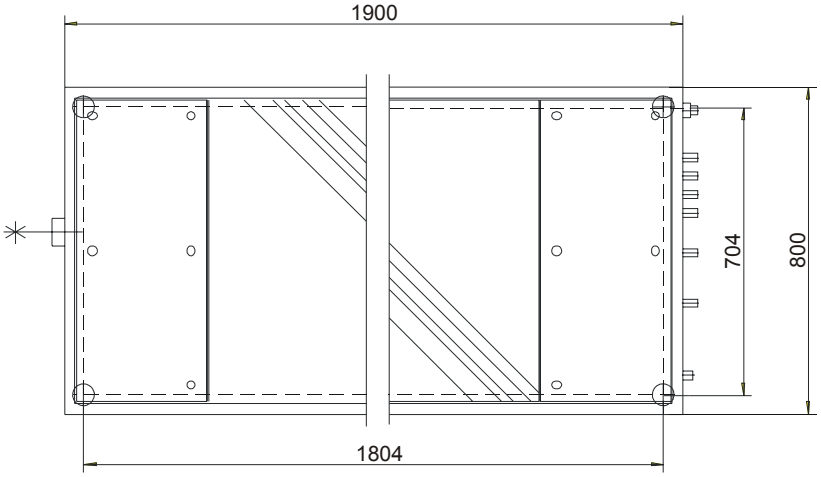

Figure 38: *Foot location*

A0409LPX

4.8.3 Gas Connections

The positions of the individual gas connections on the rear of the laser head are shown in Figure 39.

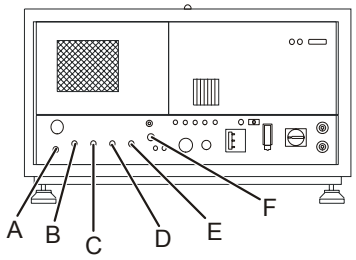

Figure 39: *Gas connections*

Key to Figure 39:

A	Purge gas connection	D	Rare gas connection
B	Inert gas connection	E	Buffer gas connection
C	Halogen gas connection	F	Vacuum pump connection

Specifications:

Gas connections	6 mm Gyrolok®
Gas lines	316 L stainless steel, electropolished inside, 6 mm outer diameter, degreased
Vacuum pump connection	Material will be supplied with the vacuum pump



CAUTION
Contaminated gas tubing can pollute the laser tube!
Keep tubing free of dust, humidity, oil or other pollutants. Operate the laser device under clean conditions.

The copper pipes (length: 2.4 meters) provided to connect the laser device to the gas supply are only intended for initial commissioning. For the permanently installed laser device, use internally electropolished stainless steel pipes as specified above instead of the copper pipes.

For safety reasons, the halogen supply line from an external gas cylinder should have a double wall tubing.

Unless otherwise agreed with Lambda Physik, a premix cylinder has to be connected to the BUFFER gas connection and a helium cylinder to the INERT gas connection.

Gas connections that are not used have to be blanked off with the stainless steel caps that are supplied with the laser device.

A0409LPX

4.8.3.1 Pressure Regulators

CAUTION
Risk of damaging the gas system!
Halogen gases corrode most metals. In addition, the use of unsuitable pressure regulators can contiminate the gas mixture .
Only use pressure regulators made of stainless steel that are suitable for halogen gases. Contact the supplier to ensure that the pressure regulator is suitable for the intended use.

Pressure regulators are supplied by gas manufacturers. Lambda Physik recommends pressure regulators which are designed to operate within the pressure range of the respective gas. Stainless steel regulators are required for halogen gases.

4.8.3.2 Gas Cabinets

Gas cylinders, especially those containing fluorine and hydrogen chloride gas mixtures pose a safety hazard because of the risk of leakage. In order to diminish this risk, safety gas cabinets are available. Please contact your gas supplier for further information.

4.8.4 Cooling Water Connections

The cooling water circuit is to beconnected to the laser head through two ½“ (outer diameter) tubes. The location of the cooling water connections on the laser head are indicated in Figure 40.

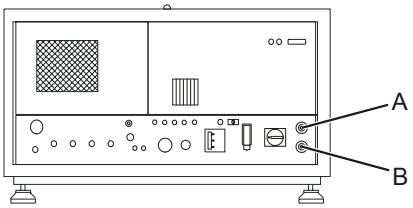

Figure 40: *Cooling water connections*

Key to Figure 40:

A Cooling water inlet B Cooling water outlet

A0409LPX

4.8.5 Electrical and Signal Line Connections

All electrical and signal lines are connected to the rear of the laser head. Figure 41 shows the location of the individual connections.

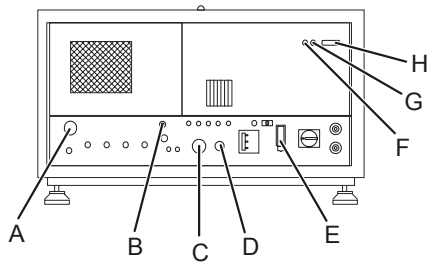

Figure 41: *Electrical and signal line connections*

Key to Figure 41:

A	HV input	E	Vacuum pump
B	Ground	F	External trigger
C	Mains output (HV power)	G	Sync out
D	Mains input	H	Communication interface

The mains input (see Figure 41, D) is through a supply line that is hard-wired to the laser head and configured for connection to a three-phase mains wall socket.

The mains output to the HV power supply (C) and input from the HV power supply (A) are through separate lines (umbilicals) that are hard-wired to the laser head and connected to one end of the separate HV power supply.

The vacuum pump is connected through a supply line that is hard-wired to the vacuum pump and connected to a socket on the laser head (E).

The external trigger (F) and sync. out (G) connections are BNC sockets (see Section 4.7.3 and Section 4.7.4 on page 80).

The communications interface connection (H) is a 25 pole D-type female port (see Section 4.7.2 on page 79).

A0409LPX

4.8.6 Air Intake and Exhaust Connections

The air intake is situated at the front (see Figure 42, A) and the exhaust at the rear (B) of the laser head.

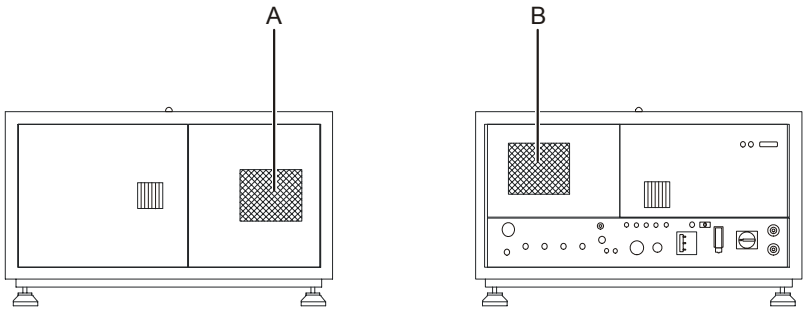

Figure 42: *Location of air intake and exhaust*



WARNING
Toxic gas hazard!
Lead the exhaust into an appropriate industrial ventilation system. Make sure that the exhaust is not connected to the ducting of systems used for the processing of breathing air (e.g. air conditioning or ventilating systems).

An exhaust line and fixing element is provided with the laser device. This enables the laser device to be connected to an appropriate industrial ventilation system.

NOTE
If the total length of the exhaust line exceeds 3 m, an additional blower is required.

A0409LPX

4.8.7 Maintenance Area

The required space for the installation is represented in Figure 43.

The installation and connection of the gas lines need a space of at least 800 mm at the rear side of the laser.

For maintenance and service actions a space of at least 800 mm at the left side of the laser is required.

For service actions (laser tube exchange) a space of at least 1000 mm at the right side of the laser is required.

For maintenance or service actions which can be done by removing the quick access service panels of the LPX*Pro*™ Series a clear height of at least 600 mm above the laser is required.

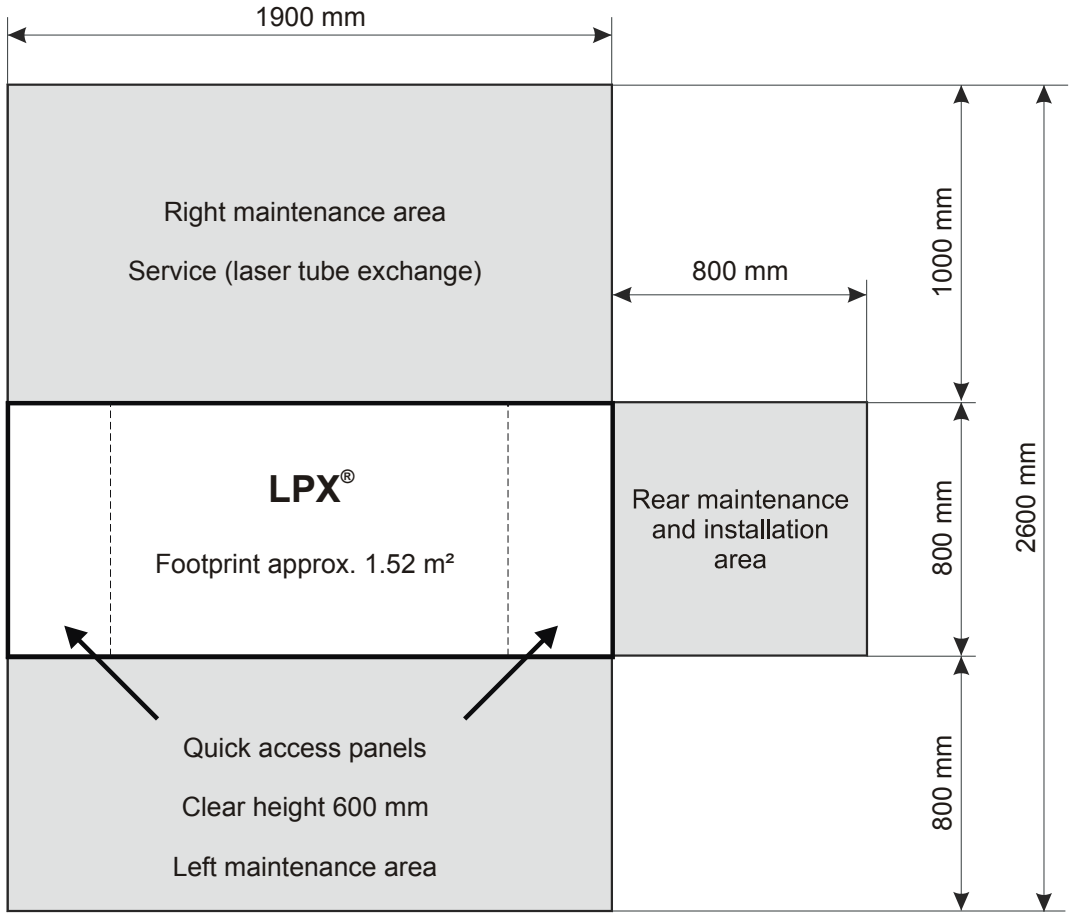

Figure 43: *Maintenance / service area*

A0409LPX

NOTE
At the rear side of the power supply, a space of 825 mm is recommended to allow proper cable routing.

4.9 Environmental Conditions

This section indicates the recommended environmental conditions for the transport, storage and operation of the LPX*Pro* laser device.

4.9.1 Transport and Storage

NOTE
The indicated temperature range only applies when all cooling water has been bled from the system.

Temperature range	-20 to 50 °C
Max. temperature gradient	5 °C/h
Ambient air pressure	650 to 1070 mbar
Max. pressure gradient	75 mbar/h
Humidity	< 50 % RH

4.9.2 Operation

Temperature range	5 to 25 °C
Max. temp gradient	2 °C/h (after warm up)
Altitude	0 to 2000 m above sea level
Humidity	30 to 70 % RH



CAUTION
Impurities in the ambient air can pollute the laser tube!
Make sure that the ambient air is free of dust, oil, organic molecules, corroding substances and photochemical decompositables or depositable compounds.

Cleanliness	class 10,000 or better

For more information, please contact Lambda Physik.

A0409LPX

5 INSTALLATION

This chapter describes the installation of the laser device. It is to be read:

– prior to initial installation,

– after transportation,

– prior to re-installation after storing the laser device.

5.1 Site Preparation

Purpose

Prepare the site for the installation of the laser device.

Tools and Materials

- LPX*Pro* Site Preparation description
- Packing lists
- Fork-lift or pallet stacker
- Cutting pliers
- Sharp knife

Preparation

1. Ensure that the installation site has been prepared and all necessary utilities are available in accordance with the specifications in the Site Preparation description.

Procedure

1. Set down the laser device at the installation site.
2. Carefully remove all packaging.
3. Ensure that the shipment is complete and undamaged. The intended contents are listed in the Packing List.

NOTE
If any components are missing or damaged, immediately inform Lambda Physik!

A0409LPX

5.2 Transport Locks

The LPX*Pro* laser device is has no transport locks.

5.3 Water Line Installation

Purpose

Connect the cooling water inlet and outlet lines to the laser head.

Tools and Materials

- Length of water hose (3 m, supplied with the LPX*Pro*)
- 2 hose clamps (for connection to laser device)
- 2 connectors, e.g. hose clamps (for connection to water source and drain)
- Hose cutter
- Appropriate screwdriver (to tighten hose clamps)
- Where necessary, additional tool (to tighten connectors for water source and drain)

NOTE
A) More than 2000 liters (500 gallons) of water are consumed a day during intensive use of the excimer laser. For cost as well as environmental reasons, we recommend connection to an external cooling circuit enabling recirculation of the cooling water. To ensure the correct water inlet temperature, this external cooling circuit is to contain a water chiller.
B) Suspended particles in the cooling water can cause sedimentation in or even clog the cooling circuit. We, therefore, strongly recommend the installation of a particle filter, available from any hardware store.

A0409LPX

Preparation

CAUTION
Risk of damaging the laser device
The use of incorrect cooling water corrodes the heat exchanger!
Do not use distilled or deionized water!

1. Ensure that your water supply corresponds with the water supply requirements (see Section 4.5 on page 76).

Procedure

2. Cut the water hose to the lengths required for the individual water inlet and water outlet lines (hoses).
3. Remove the protective caps from the water inlet and water outlet connectors.

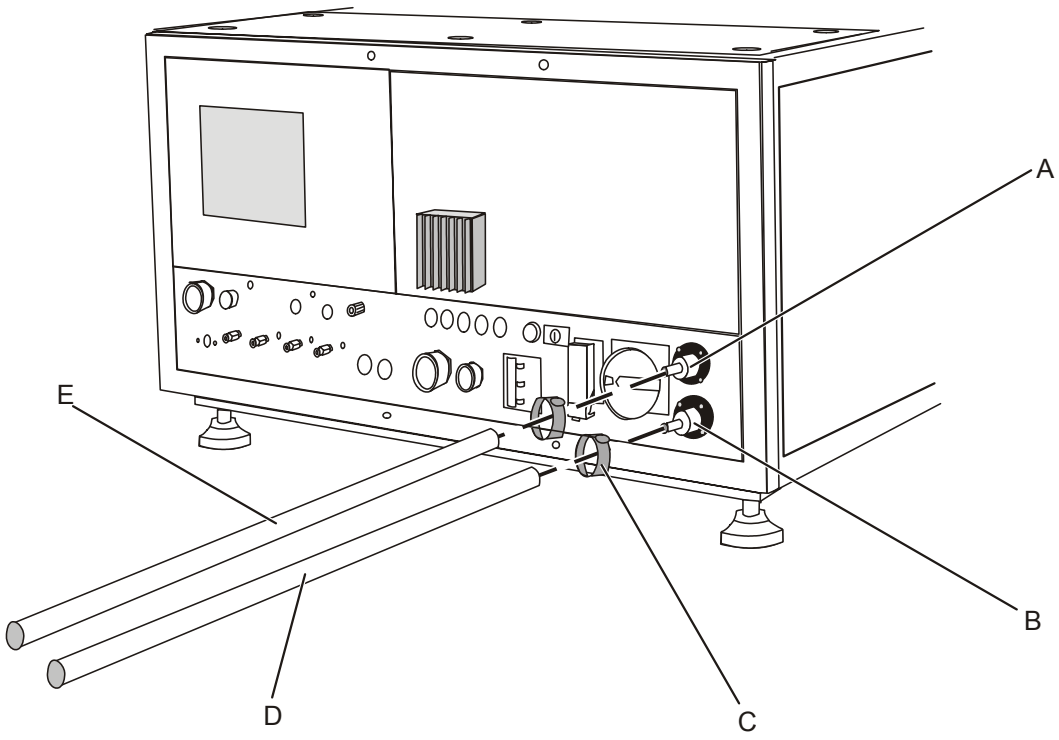

Figure 44: *Connecting water lines to the laser head*

4. Attach the water inlet hose (see Figure 44, E) to the water inlet connector (A). The hose is secured to the connector with a hose clamp (C).
5. Connect the other end of the water inlet hose to the water source (e.g. fresh water tap or outlet from water chiller). The means of connection is dependent upon the configuration of the selected source.

A0409LPX

6. Attach the water outlet hose (see Figure 44, D) to the water outlet connector (B). The hose is secured to the connector with a hose clamp C).
7. Connect the other end of the water outlet hose to the water drain (e.g. drainage system of building or inlet to water chiller). The means of connection varies according to the type of drain.
8. Turn on the water supply and adjust to the required flow rate.
9. Check that there are no water leaks or blockages.

5.4 Electrical Line Installation

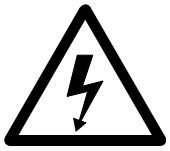

WARNING
Risk of electric shock.
Work on the electrical system and equipment of the LPX*Pro* must always be carried out by a skilled electrician or by instructed persons under the supervision and guidance of a skilled electrician and in accordance with electrical engineering rules and regulations.



CAUTION
Incorrect power connection can damage the laser device!
Ensure that the laser device is configured for your local voltage and frequency. The electrical requirements for the laser device are indicated on the laser device type plate (see Section 3.3 on page 61).

Electrical installation of the LPX*Pro* consists of the following steps:

– connection of the HV power supply module to the laser head
– connection of the vacuum pump to the laser head
– connection of the handheld keypad to the laser head
– where necessary, connection of a remote computer to the rear of the laser device
– where necessary, connection of external circuits for an external interlock switch and laser radiation warning light to the HV power supply module
– connection of the laser head to the mains power supply.

A0409LPX

5.4.1 Connecting the HV Power Supply Module

Purpose

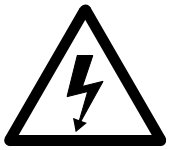

WARNING
Risk of electric shock!
Always disconnect the laser device from the mains supply before attempting to connect or disconnect the HV power supply module.

Connect the HV power supply module to the laser head. To be connected are FOL (fiber optic lightwave) links, the mains voltage power line (feeds mains voltage power to the HV power supply module) and the HV power line (carries HV power back to the laser head).

Tools and Materials

- HV power supply module
- 2.5 mm allen key
- 2.5 mm allen screws (supplied)
- Short circuit plug for remote circuit (in tool case)

Configuration of the Connection Lines

The mains voltage power line, FOL links and HV power line are connected to the laser head at the factory. They are guided to the connectors for the HV power supply module through two umbilicals. One umbilical is for the mains voltage power line and FOL links and the other for the HV power line. The mains voltage power line terminates at a 10 pin plug, the FOL links terminate at color-coded plugs and the HV power line terminates at a connector secured by a thumb screw. To ensure a secure connection, the umbilicals are screwed at the factory into a plate (designated the cable plate), which, at installation, is to be screwed onto the HV power supply module.

Preparation

1. Ensure that the laser head is not connected to the mains power supply.

Procedure

NOTE
The exact location of the sockets on the connection side of the HV power supply module may vary from the configuration shown in the Figures in this section.

2. Unscrew and remove the outer cover plate on the connection side of the HV power supply module.

A0409LPX

3. Plug the 10 pin plug into the corresponding socket, as shown in Figure 45.

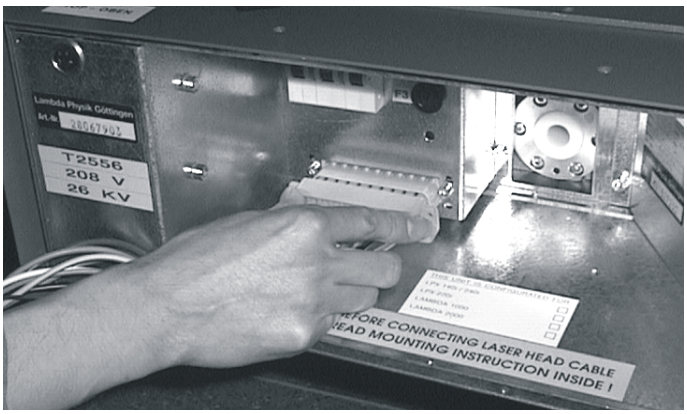

Figure 45: *Plugging-in the 10 pin socket*

CAUTION
FOL links can be easily damaged or broken!
Do not mechanically stress or break the FOL links. The minimum bending radius is 50 mm.
Never touch the end faces of the FOL links.

4. Insert the FOL links into their respective sockets as shown in Figure 46. The gray plug is to be connected to the gray socket and the blue plug to the blue socket.

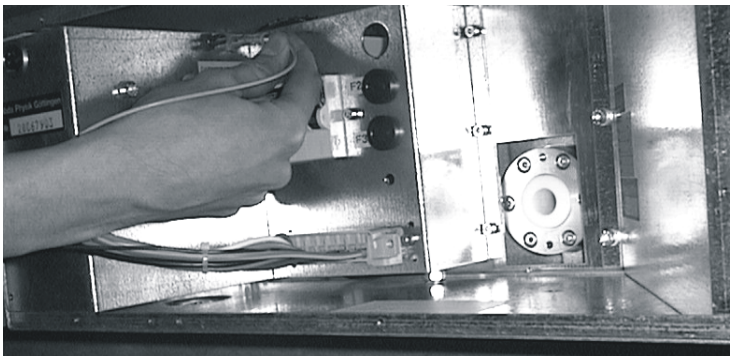

Figure 46: *Connecting HV power supply FOL links*

A0409LPX

5. Mount and screw the cable plate onto the HV power supply module. The cable plate is fitted on the left-hand side of the connection panel (see Figure 47).



Figure 47: *Mounting the cable plate*

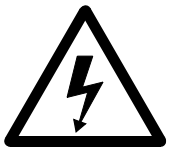

WARNING
Risk of electric shock!
The grounding cable on the HV power supply connector grounds the capacitors in the laser head. Never reinsert the grounding cable plug before checking that the voltage has been fully discharged from the capacitors.

6. Remove the grounding cable plug from the HV power line connector as shown in Figure 48.

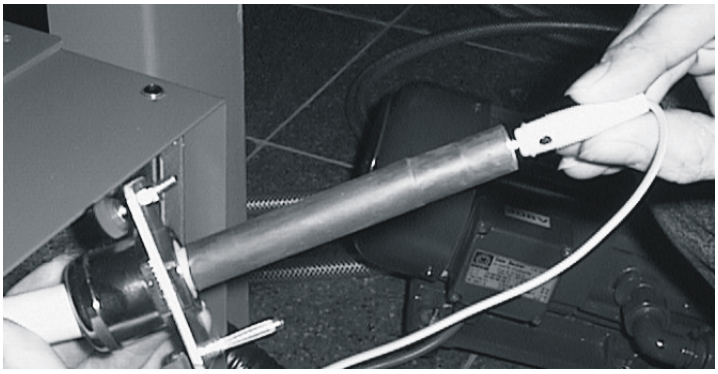

Figure 48: *Removing the grounding cable plug*

A0409LPX

7. Insert and secure the HV power line connector as shown in Figure 49. The HV power line connector is secured by tightening the red thumb screw.

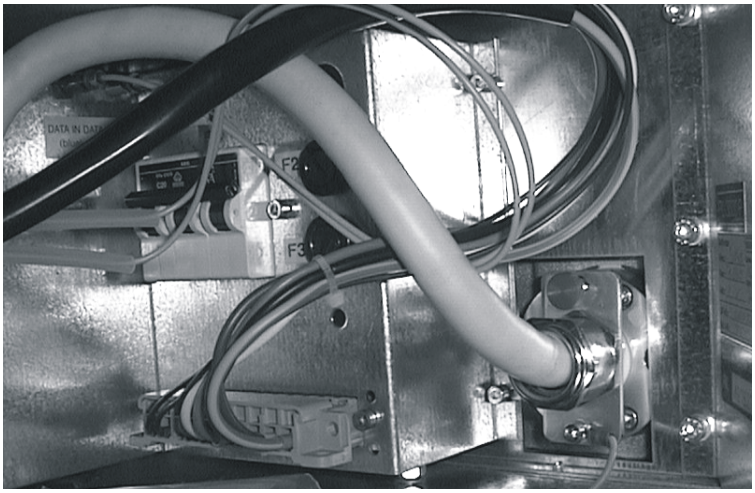

Figure 49: *HV power supply module with all connections in place*

8. Mount and screw the outer cover plate onto the HV power supply module. The outer cover plate is fitted on the right-hand side of the connection panel.

NOTE
To enable laser operation, pins 2 and 3 of the REMOTE CONTROL socket, on the connection side of the HV power supply module, have to be bridged. For more information, see Section 5.4.4 on page 99.

9. Plug the short circuit plug into the REMOTE CONTROL socket and screw tight.

A0409LPX

5.4.2 Connecting the Vacuum Pump

Purpose

Electrically connect the vacuum pump to the laser head.

NOTE
A) For further information about the vacuum pump, please refer to the vacuum pump manufacturer's documentation supplied together with this Instruction Manual.
B) The mains voltage power line is connected to the vacuum pump at the factory. The other end of the power line terminates at a 3-pin male plug.

Tools and Materials

- Vacuum pump

Procedure

1. Ensure that the laser head is not connected to the mains power supply.

Procedure

2. Insert the 3-pin male plug into the socket on the laser head marked VACUUM PUMP as shown in Figure 50.

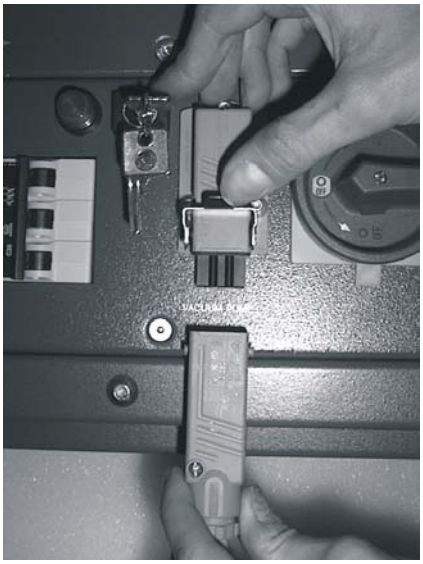

Figure 50: *Electrically connecting the vacuum pump*

A0409LPX

5.4.3 Connecting the Handheld Keypad

Purpose

Connect the handheld keypad to the Communications Interface socket on the laser head.

The handheld keypad is an easy and comfortable way to use the LPX*Pro* without an additional PC (Remote PC).

Tools and Materials

- Handheld keypad
- RS232 cable
- Appropriate screwdriver for the RS232 plug.

Preparation

- Switch off the laser device.

Procedure

1. Plug the RS232 cable into the RS232 port of the laser device (see Figure 51)



Figure 51: *Connecting RS 232 to laser head*

2. Use the screwdriver to fasten screws of the plug.

A0409LPX

3. Plug in the other side of RS232 cable into the handheld keypad (see Figure 52).

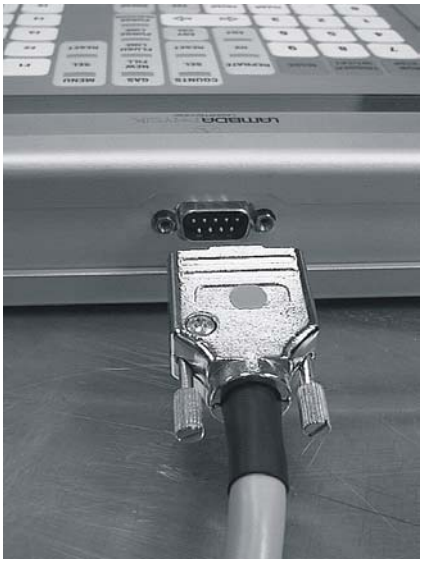

Figure 52: *Connecting RS232 to Handheld keypad*

4. Use the screwdriver to fasten screws of the plug.

5.4.4 Connecting External Circuits

Purpose

Connect the laser device to external circuits for an external interlock switch and laser radiation warning light (in accordance with international standard IEC 825).

Tools and Materials

- 4 pin round plug configured for the REMOTE socket (e.g. short circuit plug in the tool case).
- Soldering iron
- Solder

NOTE
The description of this procedure assumes that the short circuit plug provided with the laser device is going to be used. This plug has to be soldered to the circuit wires.

A0409LPX

Preparation

1. Ensure that soldering is permitted in the room in which the laser is to be installed.

Procedure

2. Remove the short circuit plug from the REMOTE socket on the connection side of the HV power supply module.
3. Unscrew and remove the cap from the plug.
4. Push the wires for both circuits through the cap of the plug.
5. Desolder and remove the bridge from the plug.
6. Solder the wires for the external interlock switch (see Figure 50, A) to pins 2 and 3 in the plug.

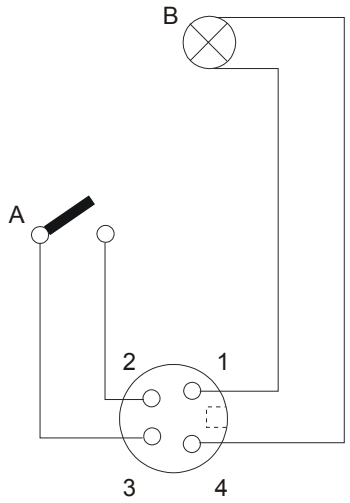

Figure 53: *Remote circuit*

7. Solder the wires for the laser radiation warning light (B) to pins 1 and 4 in the plug.
8. Screw the cap back onto the plug.
9. Insert the plug into the REMOTE socket on the connection side of the HV power supply module.

NOTE
The laser can only run, if pins 2 and 3 are bridged (e.g. through a closed external interlock switch or bridged short-circuit plug). When pins 2 and 3 are not bridged, the „Remote“ interlock is triggered.

A0409LPX

5.4.5 Connection to the Mains Power Supply

Purpose

Connect the laser head to the three-phase mains power supply.

Tools and Materials

- Appropriate mains plug for your three-phase power supply
- Appropriate screwdriver for the mains plug
- Wire cutter and stripper

Preparation



CAUTION
Incorrect power connection can damage the laser device!
Ensure that the laser device is configured for your local voltage and frequency.

1. Check that the electrical requirements for the laser device indicated on the laser device type plate correspond with your local voltage and frequency. The location of the type plate is shown in Figure 28 on page 62.
2. Ensure that the key switch and main switch on the laser head are set to OFF.

Procedure

NOTE
The mains power supply cable is internally connected to the laser head at the factory. At delivery, no plug is fitted to the other end of the supply cable. This enables connection to the three-phase mains power supply in accordance with local requirements.

3. Strip the ends of the wires in the power supply cable.
4. Connect the stripped ends of the wires to the appropriate contacts in the mains plug:

black:	phase
black:	phase
brown:	phase
blue:	neutral
yellow/green:	ground

5. Close the mains plug.

A0409LPX

6. Plug the laser device´s mains plug into the mains socket.
7. Switch on the laser device.
8. Check that the phases are correctly connected, e.g. by testing that the vacuum pump sucks.

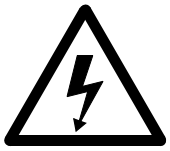

WARNING
Risk of electric shock!
Always switch off the laser device and remove the mains plug from the mains socket before opening the mains plug.

9. If the phases are incorrectly connected, exchange two phases in the mains plug and retest.

5.5 Exhaust Line Installation

The LPX*Pro* has two exhaust lines:

– The housing exhaust line.
This constantly runs during operation of the laser device to remove cooling air from the laser head housing. In conjunction with the air intake, this ensures continual air flow.

– The laser tube exhaust line (consting of vacuum hose, halogen filter, vacuum pump and exhaust gas hose). This evacuates gas from the laser tube, e.g. to enable new gas to be filled. The evacuated gas contains toxic halogens which are filtered from the exhaust gas by the halogen filter.

A0409LPX

5.5.1 Connecting the Housing Exhaust Line

Purpose

Connect exhaust line between the exhaust port on the rear of the laser head and the building industrial ventilation system.

Tools and Materials

- Exhaust line assembly (supplied)
- Two M4 screws, approx. 20 mm long
- Appropriate screwdriver or allen key to tighten M4 screws
- Connections to the industrial ventilation system
- Appropriate tool(s) for connections to the industrial ventilation system
- Additional blower (if exhaust line is longer than 3 m)
- Additional exhaust line (if exhaust line is longer than 3 m)

Preparation

1. Ensure that the proposed exhaust line corresponds with the requirements indicated in corresponding section (see Section 4.6 on page 77).

Procedure

1. Locate the exhaust line assembly onto the exhaust port by aligning the locating holes in the exhaust line fixing element with the threaded bore holes in the back panel of the laser head.
2. Secure the exhaust line to the laser head by inserting and tightening the two M4 screws.
3. Check that the air intake filter at the front of the laser is correctly fitted and not obstructed.
4. Switch on the laser device.
5. Check that the exhaust fan, mounted at the rear of the laser head, is working and sucking air out of the laser head.
6. Switch off the laser device.



WARNING
Toxic gas hazard!
Lead the exhaust hose from the laser head housing to an appropriate industrial ventilation system. Do not connect the exhaust hose to breathing air systems (i. e. air conditioning or ventilating systems).

7. Connect the other end of the exhaust hose to a suitable industrial ventilation system.
8. Check that there are no leaks from any exhaust hose connections.

A0409LPX

5.5.2 Connecting the Laser Tube Exhaust Line

Purpose

Connect the vacuum pump to the laser head and building industrial ventilation system.

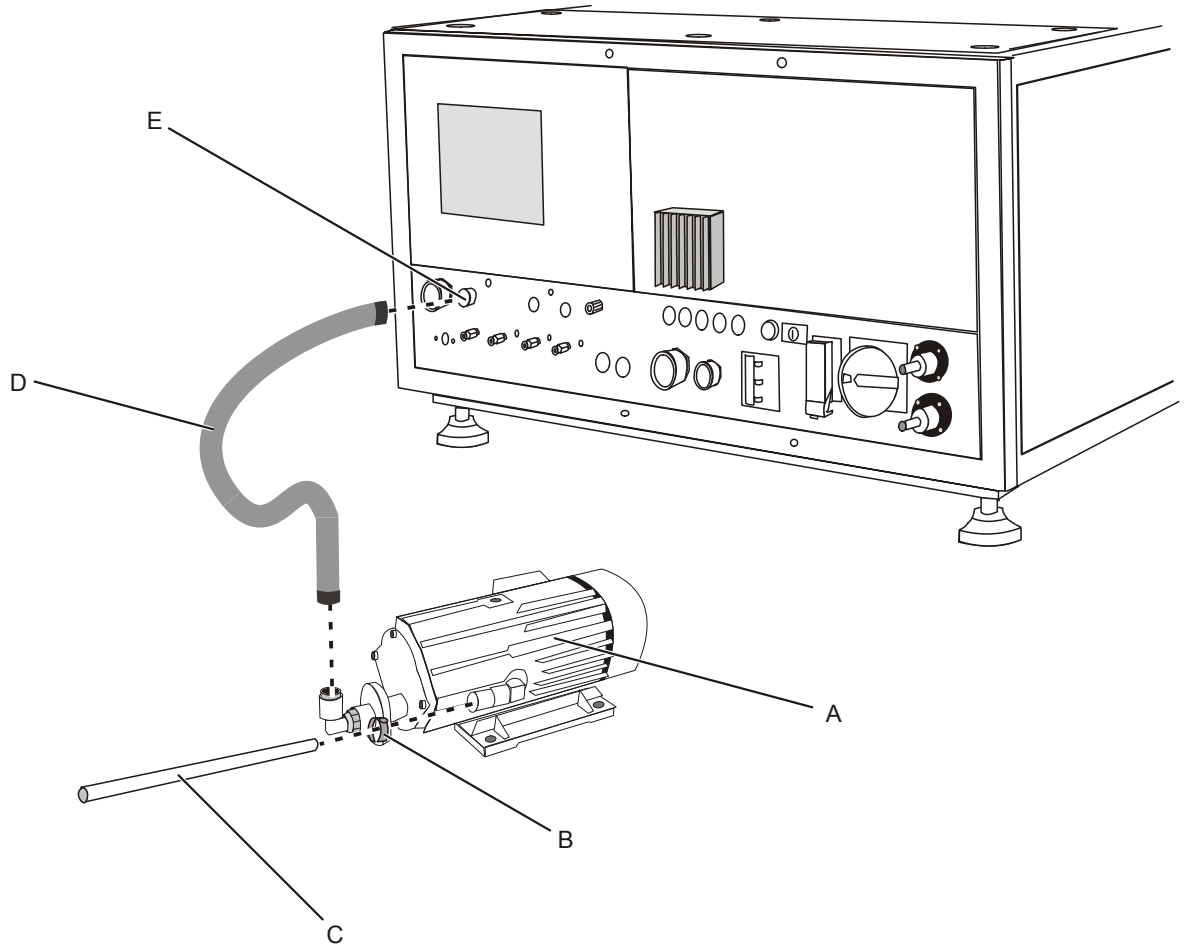

Figure 54: *Laser tube exhaust line connection*

Key to Figure 54

A	Vacuum pump
B	Hose clamp
C	Gas exhaust hose
D	Vacuum tube
E	Vacuum connection

A0409LPX

Tools and Materials

- Vacuum pump
- Vacuum hose (supplied),
- Gas exhaust hose (¾“ flexible hose)
- Hose clamps (for gas exhaust hose connections)
- 19 mm wrench
- Suitable screwdriver for hose clamps

NOTE
While connecting the vacuum pump, three plugs have to be removed. Keep these plugs in the tool case for later use.

Preparation

1. Consult the vacuum pump manual (attached to this manual) for more information about the vacuum pump.
2. Ensure that the laser device is switched off.

Procedure

3. Remove the plug from the vacuum pump (see Figure 55).



Figure 55: *Removing plug from vacuum pump*

4. Mount the vacuum hose onto the connector on the vacuum pump and tighten with a 19 mm wrench.
5. Remove the plastic plug from the connection on the laser head marked VACUUM PUMP.
6. Attach the vacuum hose to the VACUUM PUMP connection on the laser head and tighten with a 19 mm wrench.
7. Remove the plug from the vacuum pump outlet connection.

A0409LPX

8. Mount a ¾“ gas exhaust hose at the vacuum pump outlet connection.



WARNING
Toxic gas hazard!
Lead laser and vacuum pump exhaust hose to an appropriate ventilation system. Do not connect the exhaust to breathing air systems (i. e. air conditioning or ventilating systems).

9. Connect the gas exhaust hose to a suitable industrial ventilation system.

5.6 Gas Line Installation

Purpose

Connect the gas supply lines to the laser device.

The exact gas line installation procedure varies according to the configuration of the gas supply. As standard, each gas valve on the laser device is supplied by a separate gas cylinder. Available options include gas supply from premix gas cylinders and/or halogen source, the use of a gas purifier and use of a purge gas.

NOTE
The quality of the gas line installation significantly influences laser performance. Deficiencies in the gas line installation can cause impurities to enter the system and detrimentally affect laser operation and output. To ensure optimum performance, observe the following:

– Only use the specified gases.

– Only use the specified materials. This minimizes the number of points at which impurities may enter the system and surfaces where they may be produced. Never use any material other than stainless steel for tubings or fittings.

– Store gas cylinders in a dry cabinet to avoid moisture.

– Never expose the halogen line to moisture when it contains halogen or traces of halogen as this will corrode immediately.

– Avoid long and complicated line routings. These can cause impurities to enter the system. Use the shortest possible pipe lengths.

– All fittings used throughout the gas line must be clean, oil-free and leak-proof. Avoid complicated fittings.

– Carefully check for leaks.

– Never use gas lines that have been used for other gases.

A0409LPX

Unless otherwise arranged with Lambda Physik, connect premix bottles to the BUFFER gas inlet and blank off all other connections with stainless steel plugs.

Tools and Materials

- Appropriate gas cylinders and pressure regulators

NOTE
Use only gas cylinders with a remaining absolute pressure of at least 10 bar (see Section 4.3 on page 72).

- Gas supply lines (pipes)

NOTE
The copper pipes provided to connect the laser device to the gas supply are only intended for initial commissioning. For the permanently installed laser device, use stainless steel pipes as specified in Section 4.8.3 on page 83.

- 6 mm Gyrolok® gas connectors for each gas line
- 9/16“ wrench (in tool case)
- Tools for shaping and cutting stainless steel tubing
- Appropriate tools for gas cylinder and pressure regulator connections

Preparation

1. Ensure that the pressure regulators are connected to the gas cylinders.



CAUTION
Gas connectors can be easily damaged.
Always use an appropriate tool to cut stainless steel pipes. Do not use a saw. Do not use lubricants.

2. Ensure that all necessary gas supply lines have been laid and connected to the appropriate pressure regulators (or a halogen source).

   The gas lines are to correspond with the requirements indicated in Section 4.8.3 on page 83.

A0409LPX

Procedure

3. Fit each line with a 6 mm Gyrolok® fitting.
4. Check that all gas supply valves are closed.
5. Remove the blanking plug from the appropriate gas connector on the laser device.

NOTE
Keep the blanking plug in the service case for future use.

6. Fit the gas line to the appropriate connector using the Gyrolok® fitting (see Figure 56).

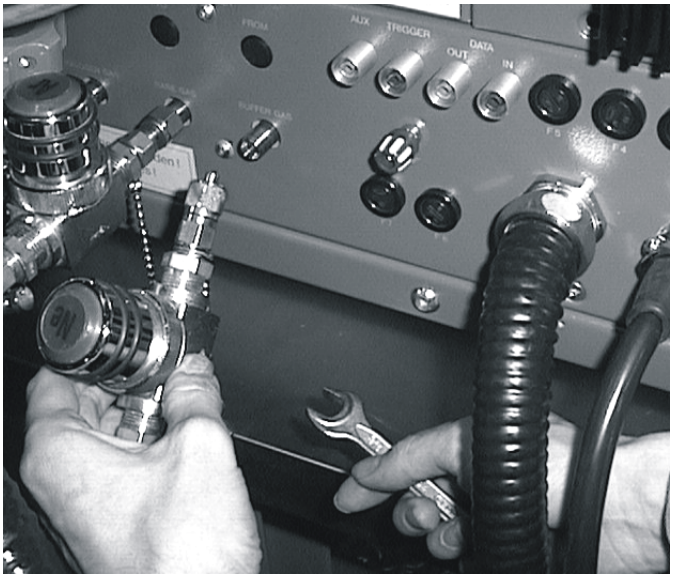

Figure 56: *Fitting the Gyrolok® Connector*

7. Use the 9/16“ wrench to tighten the Gyrolok® fitting (see Figure 57).

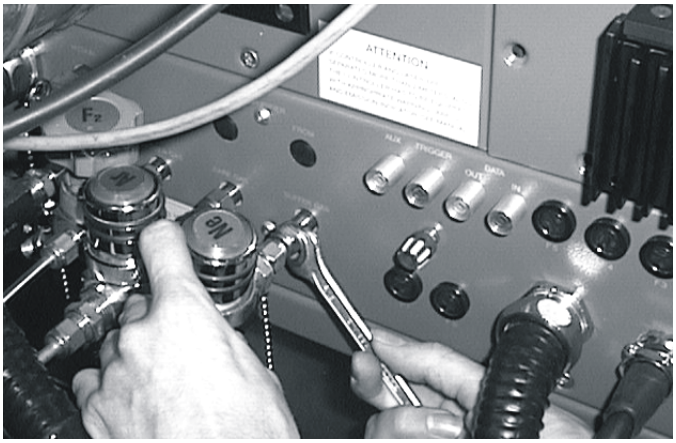

Figure 57: *Tightening the Gyrolok® Connector*

A0409LPX

8. Repeat the procedure until all supply lines are connected.
9. Check that all connections are properly matched and sealed tightly.
10. Perform a leak test on all newly fitted lines (see “Checking the Gas Line for Vacuum Leak Tightness” on page 165 and “Checking the Gas Line for Overpressure Leak Tightness” on page 166).

A0409LPX

A0409LPX

6 OPERATION

This chapter describes the fundamental operation of the LPX*Pro* excimer laser device. None of the procedures described in this chapter requires the removal of protective covers or the defeating of safety interlocks.

The chapter is divided into six sections:

- Section 6.1 provides an overview of the operating and display elements. These are situated on the operating panel (see page 112), or handheld keypad (see page 114).
- Section 6.2 (see page 123) describes the individual routine operating sequences. This includes the procedures to start and stop the laser device or laser.
- Section 6.3 (see page 135) describes the procedures that enable modes or operating parameters to be changed through input at the handheld keypad.
- Section 6.4 (see page 140) describes the use of the gas menu.
- Section 6.5 (see page 142) describes the procedures for reading and resetting the pulse counters.
- Section 6.6 (see page 144) describes procedures that are to be followed in cases of emergency to prevent injury or material damage.

NOTE
The prerequisite for performing the procedures described in this chapter is the correct installation and regular maintenance of the laser device.

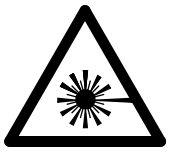

WARNING
Risk of injury through laser radiation!
The LPX*Pro* excimer laser device is a Class IV laser product.
Avoid eye or skin exposure to direct or scattered laser radiation.

Pay attention to electrical and laser safety before you start operation (see Section 3.2 on page 44).

If the laser head, HV power supply or vacuum pump show any defects, immediately switch off the laser device and solve the problem before starting the laser device again.

A0409LPX

6.1 Operating and Display Elements

This section provides an overview of the operating and display elements on the laser head, operating panel and handheld keypad. The use of these elements in individual operating sequences is described in Section 6.2 on page 123.

6.1.1 Operating Panel

The operating elements that start up and shut down the LPX*Pro* laser device are located on the operating panel at the rear of the laser head (see Figure 58). These operating elements are described in the following subsections.

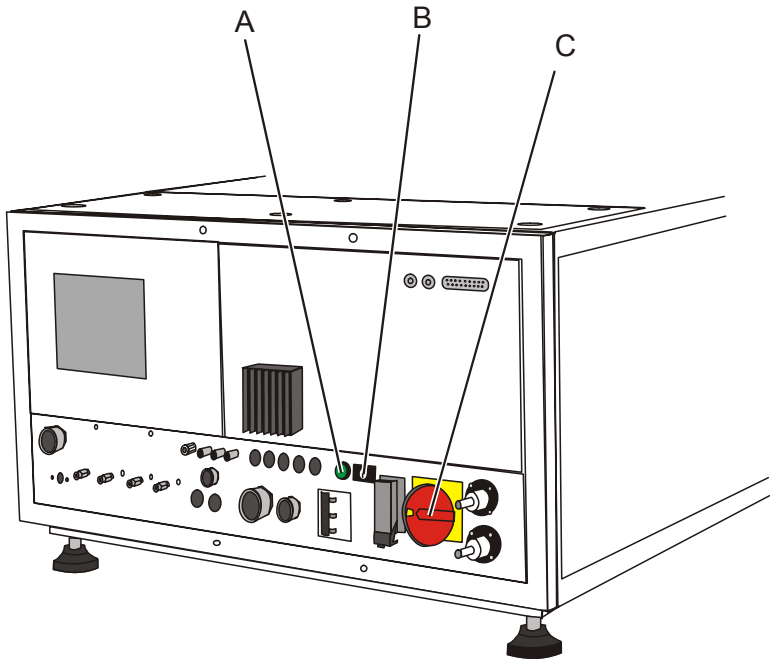

Figure 58: *Operating elements on laser head*

Key to Figure 58:

A Line ON light (see Section 6.1.1.2)
B Key switch (see Section 6.1.1.3)
C Main switch / Emergency OFF (see Section 6.1.1.1)

A0409LPX

6.1.1.1 Main Switch / Emergency Off

Set the main switch to “ON” to apply line voltage to the laser device. The laser cannot, however, be started until the control voltage is activated through the key switch.

Set the main switch to “OFF” to disconnect the laser device from the mains power supply. When shutting down the laser device under normal circumstances, do not switch off the main switch until the software has indicated that the software has been safely shut down.



CAUTION
Incorrect operation causes unnecessary downtime and spoilage!
Actuating Emergency OFF (EMO) immediately shuts down the system without finishing the current job.
Only use the EMO function in cases of emergency, i.e. to prevent injury or serious material damage.

The main switch is configured for use as an Emergency Off (EMO) device according to IEC/EN 60204-1. In case of an emergency, turn the main switch to the “OFF” position to immediately disconnect the laser device from the mains power supply.

6.1.1.2 LINE ON Light

The LINE ON light indicates that line voltage is applied to the laser device. When this light is illuminated, the control voltage circuits in the laser device can be enabled by actuating the key switch.

6.1.1.3 Key Switch

Insert the key into the key switch and set to “I” to activate the control voltage. The control voltage is required for the control modules in the laser device (e.g. gas handling module and communication interface).

Prior to enabling the control voltage, the main switch has to be set to “ON”.

Set the key switch to “O” to disable the control voltage power.



CAUTION
Prevent injury or damage through unauthorized operation!
Always remove the key from the key switch and keep in a safe place when the laser device is not to be operated.

NOTE
The key cannot be removed from the key switch in the I setting.

A0409LPX

6.1.2 Laser Radiation Warning Lamp

The laser radiation warning lamp (see Figure 59, A) is a white lamp that is situated in a clearly visible location on top of the laser head.

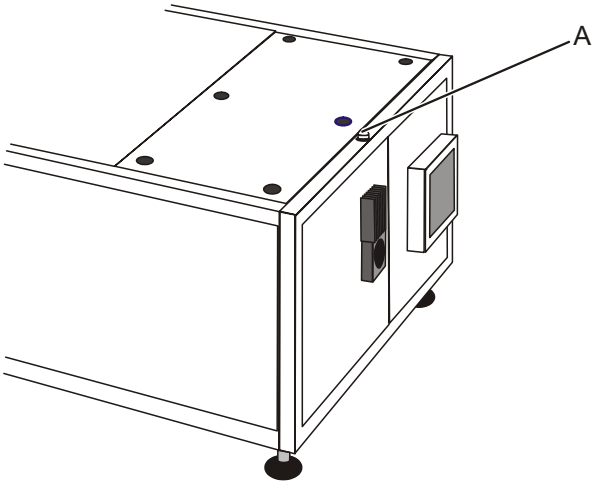

Figure 59: *Laser radiation warning lamp*

This lamp illuminates to indicate that the laser is operating; i.e. laser radiation is being emitted.

For safety reasons, the lamp is visible when wearing excimer laser eye protection and will illuminate approx. 2 seconds prior to starting laser operation.

6.1.3 Handheld Keypad

The handheld keypad (see Figure 60) controls the laser through the communication interface. It consists of a LCD display and membrane keyboard.

NOTE
The operating elements on the handheld keypad are briefly described in the subsections indicated in the Key to Figure 60. For further information regarding the specific use of the keys within particular procedures, please refer to corresponding section in this manual.

A0409LPX

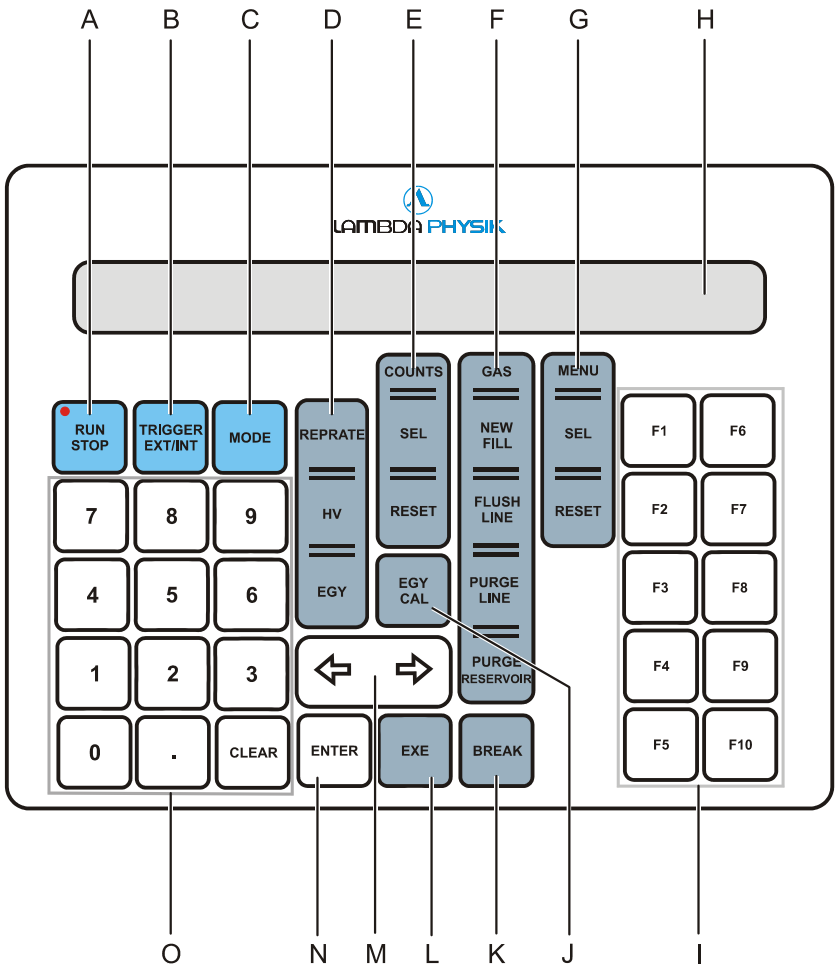

Figure 60: *handheld keypad*

Key to Figure 60

A	RUN STOP key	(see Section 6.1.3.7 on page 118)
B	TRIGGER INT EXT key	(see Section 6.1.3.8 on page 118)
C	MODE key	(see Section 6.1.3.9 on page 119)
D	REPRATE / HV / EGY keys	(see Section 6.1.3.10 on page 119)
E	COUNTS keys	(see Section 6.1.3.11 on page 120)
F	GAS keys	(see Section 6.1.3.15 on page 122)
G	MENU keys	(see Section 6.1.3.12 on page 120)
H	Display	(see Section 6.1.3.1 on page 116)
I	Function keys	(see Section 6.1.3.14 on page 121)
J	EGY CAL key	(see Section 6.1.3.13 on page 120)
K	BREAK key	(see Section 6.1.3.6 on page 117)
L	EXE key	(see Section 6.1.3.5 on page 117)
M	Cursor keys	(see Section 6.1.3.3 on page 117)
N	ENTER key	(see Section 6.1.3.4 on page 117)
O	Numerical input keys	(see Section 6.1.3.2 on page 117)

A0409LPX

6.1.3.1 Display

LCD-display with 2 rows and 40 columns that indicates the current status and parameter settings of the laser as well as displaying prompts and error messages. Figure 61 shows a typical screen display that appears after powering up the laser device when the HV constant mode (HV CONST) and internal triggering are active.

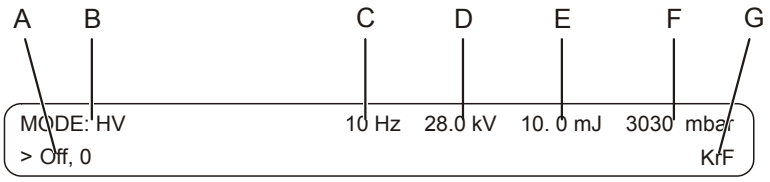

Figure 61: *Status and parameter settings display*

Key to Figure 61:

A Currently active operating mode (laser status) and status code[a]
B Running mode
C Repetition rate (internally set)
D Currently active charging voltage
E Currently emitted beam output energy[b]
F Laser tube pressure
G Gas mixture (gas menu)

a. For more information about the meaning of status codes for basic troubleshooting see Section 8.3.4 on page 234.
b. In the HV CONST mode the current value measured by the energy monitor is displayed. In the energy constant mode (EGY CONST), the set energy constant value is displayed.

After pressing one of the keys that enables a parameter setting to be changed (e.g. the MODE key), a prompt will appear in the bottom row of the display. Depending on the prompt, use the cursor buttons (right and left) to choose one of the items displayed in parenthesis or use the numerical input keys to enter a numerical value.

A0409LPX

6.1.3.2 Numerical Input Keys

The numerical input keys (0 to 9 and decimal point) allow you to enter the numerical values that define parameters such as REPRATE (repetition rate), HV (charging voltage) and EGY (beam output power). The input is confirmed by pressing the ENTER key.

Incorrect entries can be terminated prior to pressing ENTER, by pressing the CLEAR key.

If the entered value is out of range, an audible warning occurs and the last accepted value is retained.

6.1.3.3 Cursor Keys

The cursor keys (cursor left, cursor right) allow you to select a menu item, i.e. one of the items displayed in parenthesis in the bottom line of the display. Press the cursor key that moves the cursor in the direction of the required item and then press ENTER to confirm the selection.

6.1.3.4 ENTER Key

The ENTER key is to be pressed to confirm numerical input or menu items selected with the cursor keys.

6.1.3.5 EXE Key

The EXE (Execute) key is to be pressed to immediately start execution of the last selected function.

6.1.3.6 BREAK Key

The BREAK key is to be pressed to abort the currently active operation. Any unsaved changes will be lost.

If BREAK is pressed during laser operation, the laser immediately stops. Pressing BREAK during a gas action will immediately terminate the action.

BREAK can also be pressed during data input or menu item selection to terminate the action. In this case, the previously active setting is retained.

BREAK is to be pressed twice to clear an interlock after rectifying the reason for the interlock.

A0409LPX

6.1.3.7 RUN STOP Key

The RUN STOP key starts and stops laser operation (emission of laser radiation) and prepares the laser device for shut down.

– When the laser is off (no radiation being emitted but laser device powered up), press RUN STOP to start laser operation or shut down the laser device. After pressing RUN STOP, a menu appears allowing you to *RUN* or *SHUTDOWN*. In each case, use the cursor keys to select the desired mode, confirm the selection with ENTER and press EXE to execute the selection.

  After selecting *ON* and pressing EXE, laser operation is automatically started in the Warmup mode. In the warmup mode, the laser is ramped up to obtain optimum performance. After completing the warmup, the laser automatically starts with the previously active operating parameters (see Section 6.3 on page 135). Emission of laser pulses is indicated by a red LED that lights in the corner of the key and the illuminated laser radiation warning lamp on top of the laser head.

  After selecting *SHUTDOWN*, press EXE to save the current parameter settings onto the industrial computer hard disk prior to shutting down the laser device. While the settings are being saved, the message “Do not switch mains off during shut down!” appears. When the settings have been saved, the message “ready! SWITCH MAINS OFF” appears.

– When the laser is running, press RUN STOP to immediately stop laser emission.

6.1.3.8 TRIGGER INT EXT Key

The TRIGGER INT EXT key allows you to change between the internal and external trigger modes

– With internal triggering, laser pulses are triggered by the laser device’s internal trigger generator.

– With external triggering, laser pulses are triggered from an external trigger generator connected to the external trigger socket on the laser head.

After pressing TRIGGER INT EXT, the desired mode is selected with the cursor keys and confirmed by pressing the ENTER key.

A0409LPX

6.1.3.9 MODE Key

The MODE key allows you to select the desired running mode.

- HV selects the HV constant mode. In this mode, the high voltage remains constant. Consequently, the beam energy will slowly decrease during operation as the laser gas deteriorates.
- EGY PGR selects the energy constant mode with partial gas replacements. In this mode, the beam energy is kept constant by continuously increasing the high voltage (HV) to compensate for the deterioration of the laser gas. When the HV reaches a preset replacement value, the gas in the laser tube is replenished and the HV value is correspondingly reduced.
- EGY NGR selects the energy constant mode without partial gas replacements. When the HV has reached a given level, a message appears indicating that the gas in the laser tube requires replacing.

6.1.3.10 REPRATE / HV / EGY Keys

The keys REPRATE, HV and EGY allow you to change the repetition rate, charging voltage and beam output energy value.

- REPRATE enables the repetition rate to be changed for internally triggered laser operations. The repetition rate determines the number of laser pulses per second, i.e. the value is specified in Hz.
- HV enables the charging voltage to be set for laser operation in the HV constant mode. Pressing the HV key when an energy constant mode is currently active will display the HV value at which a partial gas replacement occurs.
- EGY enables the beam output energy value to be set for operations in the energy constant mode. The value is entered in mJ.

In each case press the appropriate key to select the parameter to be changed (REPRATE, HV or EGY), enter the value through the numerical input keys and confirm the input by pressing ENTER.

A0409LPX

6.1.3.11 COUNTS Keys

The COUNTS keys enable you to display and reset the laser device's pulse counters.

- SEL indicates the current reading of the Total Counter or the resettable User Counter:
  - The Total Counter counts the total number of laser pulses emitted by the laser since commissioning.
  - The User Counter counts the number of laser pulses emitted since the last counter reset.

  After pressing COUNTS SEL, The desired counter is selected with the cursor keys and confirmed by pressing the ENTER key.
- RESET allows you to reset the User Counter. After pressing COUNTS RESET, the user counter is reset to zero by pressing the EXE key. The Total Counter cannot be reset by the user.

6.1.3.12 MENU Keys

The MENU keys enable you to select or reset the laser device's gas menus.

- SEL allows different gas setting menus to be selected. If the LPX*Pro* is only to be operated with one gas mixture, this key has no function.
- RESET allows you to reset the values in the gas settings menu (gas partial pressures, gas mode, repetition rate and energy filter) to their factory settings. After pressing MENU RESET, the gas settings are reset to their factory settings by pressing the EXE key.

6.1.3.13 EGY CAL Key

The EGY CAL key selects a routine that allows the internal energy monitor to be calibrated according to an externally measured energy reading.

NOTE
The internal energy monitor is calibrated in the factory. Subsequent calibration is a maintenance procedure that is only to be carried by correspondingly authorized and trained personnel.

A0409LPX

6.1.3.14 Function Keys

The function keys F1 to F10 allow various laser operating or display functions to be selected. As the LPX*Pro* shares the same handheld keypad and control software with other laser devices, certain function keys are without function for the LPX*Pro*.

NOTE
Function keys that are only intended for Service purposes are password protected.

- F1: displays information about active interlocks.
- F2: switches off the low light function when the laser is off (not emitting radiation) or skips the warm-up period when the laser is in the warm-up phase.
  These password protected functions are provided for maintenance and troubleshooting purposes only and should, therefore, only be used by authorized and trained personnel.
- F3: evacuates the laser tube and fills it for re-passivation with a mixture of halogen and helium.
- F4: shows the current filling level of the halogen filter.
- F5: switches the laser tube temperature regulation on or off.
  This password protected function is provided for maintenance and troubleshooting purposes only and should, therefore, only be used by authorized and trained personnel
- F6: flushes the laser tube with the gas connected to the INERT connection. The function is to be called in case of a tube leakage to prevent ambient air from penetrating into the laser tube.
- F7: without function
- F8: switches between “single gas” and “gas premix” operation.
- F9: without function
- F10: without function

6.1.3.15 GAS Keys

The GAS keys allow various gas actions to be carried out. These gas actions are primarily required for maintenance purposes and should, therefore, only be carried out by correspondingly authorized and trained personnel.

- NEW FILL enables the program routine to be started that replaces the gases in the laser tube with fresh gas. The execution of the new fill procedure is described in detail in Section 7.5.1 on page 168.
- FLUSH LINE enables the program routine to be started that evacuates a specific gas line for two seconds. After pressing FLUSH LINE, a prompt appears indicating the currently selected gas line and displaying the further choices in parenthesis. A different gas line is selected with the cursor keys and confirmed by pressing ENTER.
- PURGE LINE enables the program routine to be started that evacuates a specific gas line for five seconds before filling the line with the gas connected to the inert gas connection. After pressing PURGE LINE, a prompt appears indicating the currently selected gas line and displaying the further choices in parenthesis. A different gas line is selected with the cursor keys and confirmed by pressing ENTER.
- PURGE RESERVOIR enables the program routine to be started that purges the laser tube. This routine is required for various maintenance work on the laser tube.

A0409LPX

6.2 Routine Operating Sequences

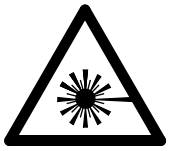

WARNING
Risk of injury through laser radiation!
The LPX*Pro* excimer laser device is a Class IV laser product.
Avoid eye or skin exposure to direct or scattered laser radiation.
Section 3 (“Safety”) shall have been read and understood before starting laser operation.

This section describes individual operating sequences for the LPX*Pro* excimer laser device. It assumes operation of the laser through the handheld keypad.

NOTE
The terms “laser” and “laser device”, as used in this section, are defined in Section 1.3 on page 6.

6.2.1 Check Beam Path

Purpose

Ensure that the laser beam will be safely guided to the intended target.

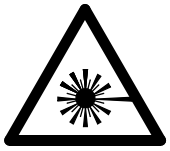

WARNING
Uncontrolled direct or diffuse reflection of the laser beam can cause serious injury!
Ensure that there are no reflective objects or particles in the path of the laser beam.

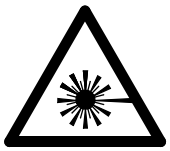

CAUTION
Risk of fire or release of fumes!
Ensure that there are no materials in the path of the laser beam which may ignite or emit fumes when subject to laser radiation.

NOTE
Utmost safety is provided by completely shielding the beam path (e.g. through a protective enclosure or protective tubes). When the beam path is not to be shielded; keep the beam, wherever possible, in a single plane. Avoid directing the beam at head height.

Tools and Materials

- None

A0409LPX

Preparation

1. Fully familiarize yourself with the information about ultraviolet light and ultraviolet radiation safety in Sections 3.2.1.1 and 3.2.2.1 of this manual.

Procedure

2. Shielded beam path:
   Ensure that all shields are correctly installed, i.e. there is no risk of unwanted beam emission.
3. Unshielded beam path:
   Ensure that there are no persons, reflective objects or objects which can ignite and/or emit fumes in the beam path.
4. Secure the beam path and vicinity of the beam path against entry of persons.

6.2.2 Turn On Gases

NOTE
This section describes gas handling for a straight-forward one gas source for one laser device system. In industrial environments, the LPX*Pro* is most likely connected to an external gas handling system that serves a number of consumers. For exact information about operating the gas handling system, please refer to the system supplier's instructions

Purpose



WARNING
Health hazard through halogen gas leakage!
To minimize the risk of gas leaks, keep the gas cylinder valves closed except when the currently active operating mode or working action requires the external supply of gas.

A0409LPX

Turn on the externally supplied gases. We differentiate between excimer laser gases and the purge gas:

– The excimer laser gases are required for laser operation. The gases are to be turned on when running the laser in the energy constant mode (EGY CONST) or when performing a new gas fill or other gas action (e.g. purge laser tube prior to a window exchange).

– The purge gas purges the beam path within the laser device. This is necessary to prevent the formation of ozone when operating the laser at wavelengths shorter than approx. 240 nm (i.e. 193 nm). At longer wavelengths, purging the beam path serves to minimize optic contamination.

NOTE
The purge gas (nitrogen) is to be turned on at least 5 minutes before starting laser operation.

Tools and Materials



CAUTION
Incorrect handling will cause unnecessary downtime!
Only use gas cylinders with a remaining pressure of more than 10 bar (abs.) to ensure that there is an adequate gas supply to perform gas actions. Depending on the configuration of the gas system, pressures of below 20 bar (abs.) may be critical.

- Gases as specified (see Section 4.3 on page 72), Gas cylinders with a remaining pressure of at least 10 bar (abs.)

Preconditions

- Gas cylinders connected to the appropriate connectors on the laser device.

Turning On the Gases



CAUTION
Incorrect operation can damage the pressure regulator!
If pressure is applied to a pressure regulator with low secondary pressure, the pressure regulator membrane may become damaged. Always ensure that the pressure regulator is closed, before opening the gas cylinder valve.

A0409LPX

1. Turn the valve on the pressure regulator (see Figure 62, A) of the first gas line counter-clockwise to its stop to ensure that the pressure regulator is closed.

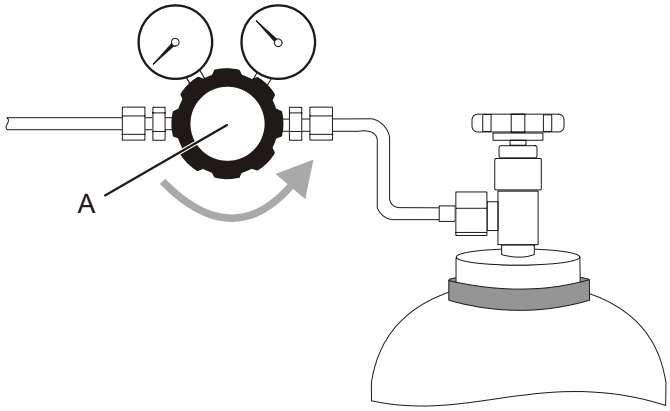

Figure 62: *Closing pressure regulator*

2. Open the valve on the gas cylinder (see Figure 63, A) by turning counter-clockwise.

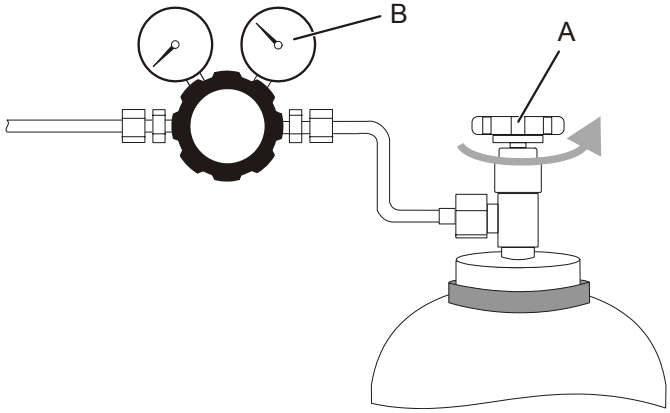

Figure 63: *Opening gas cylinder valve*

3. Check the pressure gauge (see Figure 63, B) indicating the pressure in the gas cylinder to ensure that there is a remaining cylinder pressure of at least 10 bar (abs.).

A0409LPX

4. Turn the valve on the pressure regulator (see Figure 64, A) clockwise until the pressure gauge (B) indicates the required pressure.

NOTE
The required pressures for the individual gases are indicated in Section 4.3 on page 72.

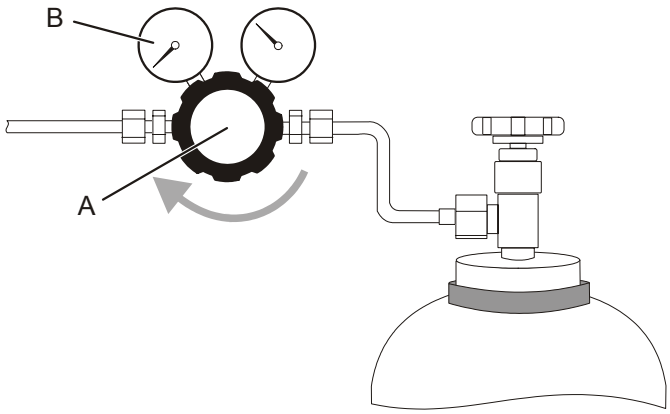

Figure 64: *Setting pressure regulator to required pressure*

5. Repeat steps 1 to 4 to turn on each of the other gases connected to the laser device.

A0409LPX

6.2.3 Start-Up Laser Device

Purpose

Start-up the laser device to enable laser operation. The device starts with a self-test of the data ring and laser modules and the warming-up of the thyratron.

Tools and Materials

- None

Preconditions

- Laser device ready to operate (e.g. device correctly connected to the electricity, gas and water supplies and linked to the laser assembly or laser unit).
- Beam path checked (see Section 6.2.1 on page 123)
- Where applicable, purge gas turned on for at least 5 minutes (see Section 6.2.2 on page 124).
- Externally supplied excimer laser gases turned on if gas actions are required (see Section 6.2.2 on page 124).

Preparation



WARNING
Risk of serious injury!
Ensure that only authorized and trained personnel operate the laser device.

1. Check the maintenance schedule.
2. Turn on the cooling water (see Section 4.5 on page 76 for the cooling water specifications).

A0409LPX

Turning-On the Laser Device

3. Turn the main switch (see Figure 65, A) clockwise to the ON setting. The LINE ON lamp (B) lights and various consumers in the laser device will start.

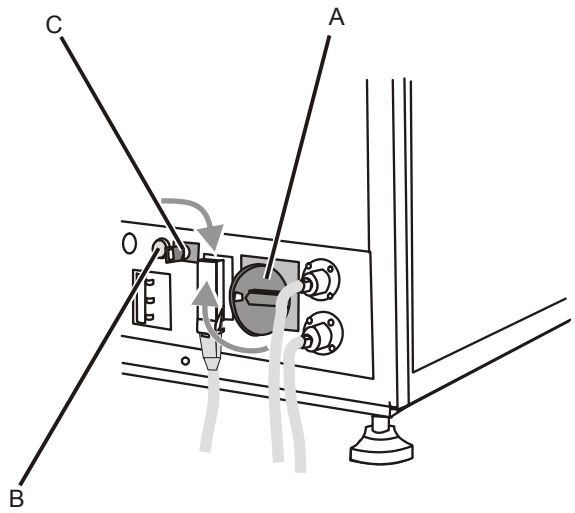

Figure 65: *Switching on the laser device*

4. Insert the key into the key switch (see Figure 65, C) and turn clockwise to the I setting to activate the laser controller.

   The laser device performs a self-test.
   If a serious malfunction is detected during the self test, “FATAL ERROR“ will appear in the 2nd line of the handheld keypad display.

   After successfully completing the self-test, the laser is warmed-up for a period of 8 minutes. During this period ”WARMUP XX min“ is displayed (”XX“ indicates the remaining warm-up time in minutes).

   During the warm-up phase, no laser light can be emitted. Checking and maintenance actions that do not require laser emission can, however, be carried out. These actions include:

   – checking parameter settings (see Section 6.3 on page 135).
   – flushing/purging the gas lines (see Section 7.4 on page 155).
   – exchanging the laser gas (see Section 7.5.1 on page 168).

   After completing the warm-up phase, the laser is ready to operate (see Section 6.2.4 on page 130).

A0409LPX

6.2.4 Start Laser Operation

Purpose

Switch on the laser beam to commence lasing using the currently set operating parameters. To enable generation of the laser beam, the high voltage circuit is activated.

Tools and Materials

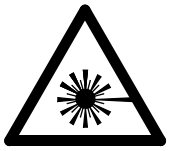

WARNING
Risk of eye injury!
Always wear appropriate laser protective eyewear when working on or with an open (i.e. unprotected) excimer laser beam (see Chapter 3).

- Appropriately rated laser protective eyewear

NOTE
Protective eyewear is not necessary when the LPX*Pro* is part of a laser unit with a completely sealed beam path (for further information, please refer to the laser unit supplier's documentation).

Preconditions

- Beam path correctly shielded or secured to ensure that the laser beam will be safely guided to the intended target (see Section 6.2.1 on page 123).
- Laser device started-up and ready to emit laser radiation (see Section 6.2.3).
- Handheld keypad connected to the communication interface socket on the laser head.

Preparation

1. When working with an open laser beam, take off your watch, ring or any other jewelry which could cause reflections that divert the laser beam from the intended path
2. Ensure that the operating parameters displayed in the top line of the handheld keypad display are correct for the laser operating sequence that is to be started.

A0409LPX

Starting the Laser

3. Open the beam shutter (see Figure 66, B).

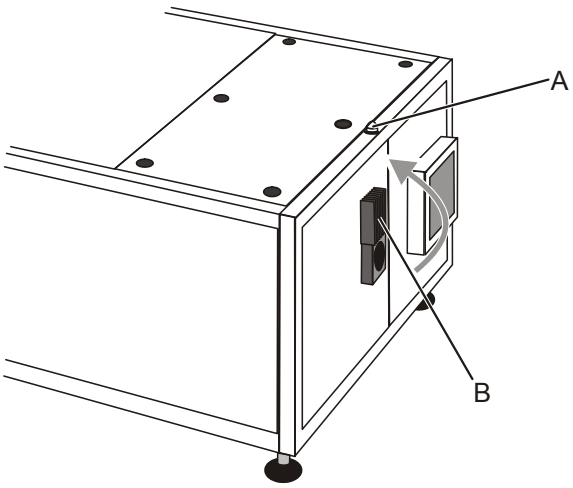

Figure 66: *Opening the beam shutter*

4. Press <RUN/STOP> (see Figure 67, A).

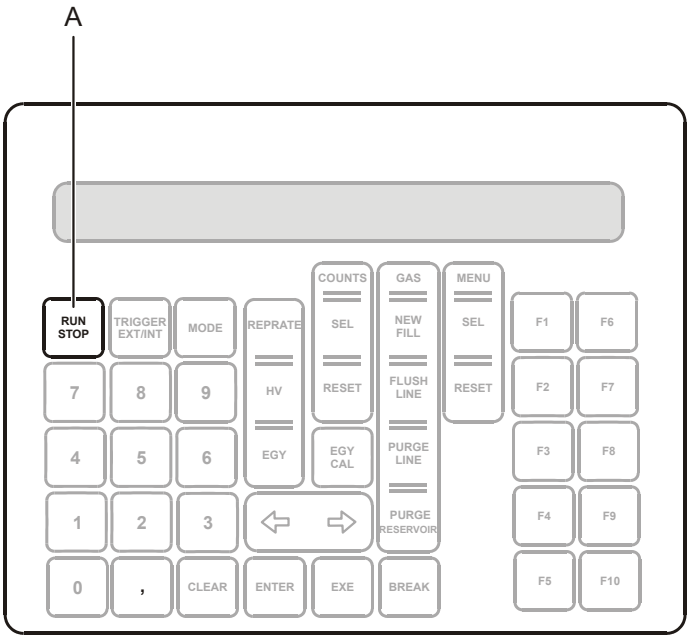

Figure 67: *RUN / STOP key on the keypad*

After a short delay to initialize the power supply, the Laser ON warning light (see Figure 66, A). and the red LED in the RUN/STOP key light. Laser light pulses are emitted at the given repetition rate. This can be recognized by an audible clicking.

If the laser does not start, the power supply was unable to be initialized. In this case, switch the laser device off and then on again and attempt to restart the laser. If the problem persists call service.

A0409LPX

6.2.5 Stop Laser Operation

Purpose

Stop the laser for longer processing interruptions and prior to shutting-down the laser device.

NOTE
For short interruptions in the processing sequence, the manual shutter can be closed. To maximize the lifetime of the modules in the laser device, the laser should be switched off during longer processing interruptions.

Tools and Materials

- None

Preconditions

- Laser switched on (laser radiation being emitted)
- Handheld keypad connected to the communication interface socket on the laser head.

Stopping the Lasers

1. Press the <BREAK> key twice (see Figure 68, A) to stop the laser.

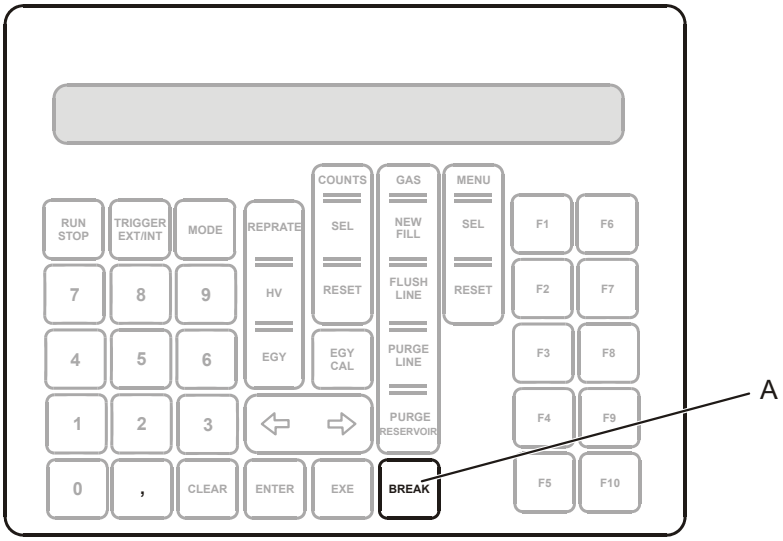

Figure 68: *BREAK key on the keypad*

2. Close the beam shutter.

NOTE
The <RUN/STOP> key can also be used. This will, however, not stop the laser if a command that requires input is active.

A0409LPX

6.2.6 Shut-Down Laser Device

Purpose

Shut down the laser device prior to maintenance or after use.

Tools and Materials

- None

Preconditions

- No laser radiation being emitted (see Section 6.2.5) or other routines (e.g. window exchange) active .

Switching off the Laser Device

3. Turn the key in the key switch (see Figure 69, C) counter-clockwise to the “O” setting.

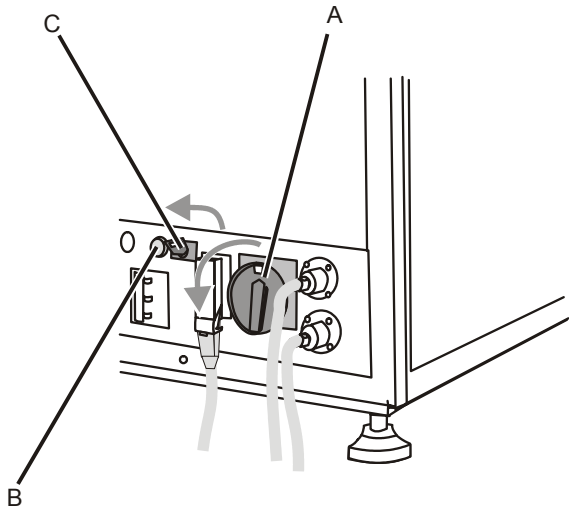

Figure 69: *Switching off the laser device*



WARNING
Prevent accidents through unauthorized operation!
To prevent unauthorized operation of the LPX*Pro*, always remove the key from the key switch after shutting down the laser device. Keep the key in a safe place.

4. Remove the key from the key switch and keep in a safe place.
5. Turn the main switch (see Figure 65, A) counter-clockwise to the “OFF” setting.

   The LINE ON lamp (B) goes out.
6. Turn off the cooling water supply at the source.
7. Turn off the gases (see Section 6.2.7).

A0409LPX

6.2.7 Turn Off Gases

NOTE
This section describes gas handling for a straight-forward gas system with one gas source for one laser device. The LPX*Pro* may be connected to an external gas handling system that serves a number of laser devices. Therefore, for exact operating information, please refer to the gas handling system supplier's instructions.

Purpose

Turn off the excimer laser gases and/or purge gas at the source.

NOTE
A) Turn off all gases when the laser device is to be shut down for longer periods (e.g. overnight).
B) Turn off excimer laser gases when no activities requiring gas activities are to be performed.

Tools and Materials

- None

Preconditions

- None

Turning Off Gases

1. Close the valve on the gas cylinder (see Figure 70, A) by turning it clockwise to its stop.

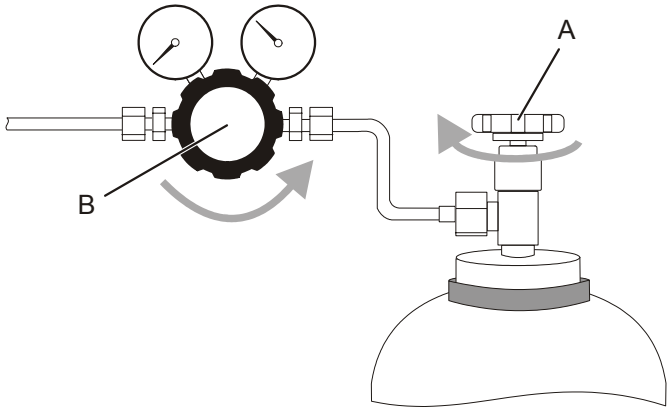

Figure 70: *Shutting down the gas supply*

2. Turn the valve on the gas pressure regulator (see Figure 70, B) counter-clockwise to its stop. This ensures that the pressure regulator is closed.
3. Repeat steps 1 and 2 to turn off the other gases.

A0409LPX

6.3 Operating Modes and Parameters

This section describes the selection and setting of operating modes and parameters with the handheld keypad.

NOTE
When the laser device is switched off, the last settings are stored and reactivated when the laser device is restarted. In certain operating modes, these settings will be overridden by default settings. Therefore, before starting the laser, always check the settings of the operating parameters.

Tools and Materials

- None

6.3.1 Change Trigger Mode

Purpose

Switch between external and internal triggering of the laser.

- Internal triggering (INT):
  laser pulses are triggered by the laser device's internal trigger generator. This causes laser pulses to be fired at the preselected repetition rate.
- External triggering (EXT):
  laser pulses are triggered by an external trigger generator connected to the EXT TRIG. socket on the back of the laser head.

Requirements

- Laser device switched on
- Internal triggering:
  Repetition rate correctly set (see Section 6.3.2)



CAUTION
Risk of damaging laser device!
Do not connect or disconnect the external trigger cable to the EXT. TRIG socket while the laser is running.

- External triggering:
  External trigger generator correctly set and connected to the EXT. TRIG (external trigger) socket on the rear of the laser head.

A0409LPX

Selecting the Trigger Mode

1. Press <TRIGGER INT EXT>.
   The bottom line of the handheld keypad display reads:
   “TRIGGER= *current selection* (INT, EXT)”.
2. Press either <Cursor Right> or <Cursor Left> to select the desired trigger mode.
3. Press <ENTER> to confirm the selection.

6.3.2 Change Repetition Rate

Purpose

Set the repetition rate (rep. rate) for internal triggering of the laser.

NOTE
A) When the laser is operating in the internal trigger mode, the changed repetition rate will become active immediately.
B) The repetition rate can also be changed when the laser is operating in the external trigger mode. In this case, the next internally triggered laser operation will start with the changed repetition rate.

The repetition rate is always indicated in Hz (1/s). Only integers are accepted. The minimum repetition rate is 1 Hz. The maximum repetition rate depends on the LPX*Pro* version and is indicated on the corresponding data menu page.

Preconditions

- Laser device started up (see Section 6.2.3)

Entering the Repetition Rate

1. Press <REPRATE>.
   The bottom line of the handheld keypad display reads:
   “REPRATE= *current setting* Hz”.
2. Use the numerical input keys to enter the desired value in Hz.
3. Press ENTER to confirm the selection.
   The new value will be indicated in the top line of the display.

NOTE
A beep tone will indicate an out of range value. In this case, the previously set value remains active.

A0409LPX

6.3.3 Change Running Mode

Purpose

Select the desired laser running (energy management) mode.
The available choices are:

– Energy constant mode with partial gas replacement (EGY PGR)

– Energy constant mode without partial gas replacement (EGY NGR)

– HV constant mode (HV)

The selected running mode will become immediately active and is indicated in the top left corner of the handheld keypad display.

– When the HV constant mode is selected, the currently set charging voltage becomes active.

– When one of the energy constant modes is selected, the currently set beam output energy value becomes active The high voltage value at which a partial gas replacement occurs (HV_{repl} value) can be displayed by pressing the <HV> key.

For further information about energy management modes see Section 2.7 on page 32.

Preconditions

- Laser device switched on
- HV constant mode:
  HV charging voltage correctly set (see Section 6.3.5 on page 139).
- Energy constant mode:
  Beam output energy value correctly set (see Section 6.3.4 on page 138). Gas cylinder valves open and pressure regulators correctly set (see Section 6.2.2 on page 124).

Selecting the Running Mode



CAUTION
Risk of processing wastage!
During a partial gas replacement (EGY PGR) the pulse energy fluctuations are higher than during normal operation. Ensure that the currently active processing application will not be harmed..

1. Press <MODE>.
   The bottom line of the handheld keypad display reads:
   “MODE=*current selection* (HV, EGY PGR, EGY NGR)”.
2. Press <Cursor Right> and/or <Cursor Left> to select the desired running mode.

A0409LPX

3. Press <ENTER> to confirm the selection.
   The selected running mode is indicated in the top left corner of the handheld keypad display

NOTE
The message “PRESET ENERGY TOO HIGH“ appears when a new gas fill is required (see Section 7.5.1 on page 168)

6.3.4 Change Beam Output Energy Value

Purpose

Set the beam output energy value for laser operations in one of the energy constant modes.

NOTE
The beam output energy value cannot be changed when the HV constant mode is selected. The range of possible energy values is indicated in the gas menu (see Section 6.4 on page 140).

Preconditions

- Energy constant mode (EGY PGR or EGY NGR) selected (see Section 6.3.3)

Entering the Beam Energy Value

1. Press <EGY>.
   The bottom line of the handheld keypad display reads:
   “EGY= *current setting* mJ”.

NOTE
If <EGY> is pressed when the HV constant mode is active, a beep tone indicates that the selection has been denied.

2. Use the numerical input keys to enter the desired value in mJ.
3. Press <ENTER> to confirm the input.
   The new value appears in the top line of the handheld keypad display.

NOTE
A beep tone will indicate an out of range value. In this case, the previously set value remains active.

A0409LPX

6.3.5 Change Charging Voltage

Purpose

Set the charging voltage for laser operations in the HV constant mode. The largest and smallest permissible high voltage values are determined in the gas menu (see Section 6.4 on page 140).

Preconditions

- HV constant mode selected (see Section 6.3.3)

Entering the Charging Voltage

1. Press <HV>.
   The bottom line of the handheld keypad display reads:
   “HV= *current setting* kV”.

NOTE
If <HV> is pressed when one of the energy constant modes is active, a beep tone indicates that the selection has been denied.

2. Use the numerical input keys to enter the desired value in Hz.

NOTE
Input with one digit after the decimal point is permitted.

3. Press <ENTER> to confirm the input.
   The new value appears on the handheld keypad display.

NOTE
A beep tone will indicate an out of range value. In this case, the previously set value remains active.

A0409LPX

6.4 Gas Menu

The gas menu determines the mixture and partial pressures of the gases in the laser tube. Laser devices that are configured for operation with different gas mixtures have a corresponding gas menu for each gas mixture. The correct gas menu has to be chosen prior to starting laser operation. The laser controller will save the last selected gas menu when the laser device is switched off.

6.4.1 Select and Change Gas Menu

Purpose

Select the gas menu for the gas mixture appropriate to the wavelength at which the laser is to be operated. The gas menu displays the following parameters:

– Menu number,

– Gas mixture,

– Partial pressures (sequentially).

Requirements

- Laser device switched and laser ready to operate (laser radiation not being emitted)

Selecting and Changing the Gas Menu

1. Press the <MENU SEL> key.
   A short form of the current menu will be displayed in the bottom line of the handheld keypad display.
2. Press <Cursor Right> and/or <Cursor Left> to select the number of the desired gas menu.
3. Press <ENTER> to confirm the selection.
4. Press <ENTER> to choose the next partial pressure.
   The factory settings for the partial pressures are optimized and should only be changed when the gas specifications change. If necessary, the gas menu can be reset to the factory settings (see Section 6.4.2 on page 141).
5. Where necessary, use the numerical keys to enter a new partial pressure.
   The limits for the partial pressures are ± 20 % of the partial pressures defined through the factory settings.
6. Repeat steps 4 and 5 for the next gas components.
7. Press <ENTER> to confirm the settings in the gas menu.
   The laser device will carry out the next new fill on the basis of the revised gas menu data.

A0409LPX

6.4.2 Reset Gas Menu to Factory Settings

Purpose

Reset the data in the gas menu to the factory settings. The following values will be changed:

– Partial pressures,

– Gas mode,

– Repetition rate,

– Energy filter.

Requirements

- Laser device switched on and laser ready to operate (laser radiation not being emitted)

NOTE
When the laser is in the OFF mode, this command is only available twice.

Resetting the Gas Menu

1. Press the <MENU SEL> key.
   A short form of the current menu will be displayed in the bottom line of the handheld keypad display.
2. Press <Cursor Right> and/or <Cursor Left> to select the number of the desired gas menu.
3. Press <RESET>.
4. Press <EXE> to reset the gas menu to the factory settings .

A0409LPX

6.5 Pulse Counters

This section describes the available pulse counter functions (read Total Counter or User Counter and reset User Counter).

NOTE
The pulse counter functions are available with the laser running or when the laser is in the off mode.

6.5.1 Read Total Counter

Purpose

Obtain the total counter reading to determine the total number of laser pulses emitted by the laser since commissioning.

Preconditions

- None

Reading the Total Counter

1. Press <COUNTS SEL>.
   The bottom line of the handheld keypad display indicates the currently active counter and number of pulses.
2. If necessary, use the <Cursor Left> key to select the total counter reading.
3. Note the counter reading.
4. Press ENTER to cancel the counter reading function.
   The previously active screen display re-appears.

A0409LPX

6.5.2 Read User Counter

Purpose

Obtain the user counter reading to determine the total number of laser pulses emitted since the last counter reset.

Preconditions

- None

Reading the User Counter

1. Press <COUNTS SEL>.
   The bottom line of the handheld keypad display indicates the currently active counter and number of pulses.
2. If necessary, use the <Cursor Right> key to select the user counter reading.
3. Note the counter reading.
4. Press ENTER to cancel the counter reading function.
   The previously active screen display re-appears.

6.5.3 Reset User Counter

Purpose

Reset the user counter reading to zero.

Preconditions

- None

Resetting the User Counter

1. Press <COUNTS RESET>.
   “COUNTER=RESET” appears.
2. Press <EXE> to reset the user counter to zero.
   “EXECUTED” briefly appears to confirm that the user counter has been reset.

A0409LPX

6.6 Emergency Functions

This section describes functions that are to be used to prevent injury or material damage in case of emergencies (e.g. situations caused by malfunctions of the laser device).

6.6.1 Emergency Off

Purpose

Immediately shut down the laser device in case of an emergency.

Tools and Materials

- None

Preconditions

- None

Activating Emergency OFF



CAUTION
Incorrect operation causes unnecessary downtime and spoilage!
Activating Emergency OFF (EMO) immediately shuts down the system without finishing the current job.
Only use the EMO function in case of an emergency, i.e. to prevent injury or serious material damage.

1. Turn the main switch counter-clockwise to the “OFF” setting.



WARNING
Injury hazard through incorrect reactivation!
After activating Emergency OFF (EMO), always contact authorized maintenance / safety personnel to ensure that the system is safely put back into operation.

2. Notify the appropriate authorized person that Emergency OFF has been activated, indicating the reason for activation.

Restarting the Laser Device

3. Ensure that the system can safely be put back into operation.
4. Turn the key switch counter-clockwise to the “0” setting.
5. Restart the laser device (see Section 3.5 on page 6).

A0409LPX

6.6.2 Emergency Fill with Inert Gas

Purpose

An emergency gas fill (“manual fill with inert gas“) fills the laser tube with inert gas for 10 seconds. This is required to fill the laser tube to a pressure higher than atmospheric pressure to protect it (e.g. after a malfunction) for a period from the penetration of ambient air. This function is required:

– when (e.g. due to the interruption of a procedure) the tube pressure has dropped below 1050 mbar,

– when the laser tube has a leak (or a leak is suspected).

NOTE
This function can only be used when an inert gas cylinder is connected to the appropriate gas fitting on the laser head. If an inert gas cylinder is not connected, carry out a transport filling (see Section 7.11.1 on page 214).

Tools and Materials



CAUTION
Incorrect handling will cause unnecessary downtime!
Only use gas cylinders with a remaining pressure of more than 10 bar (abs.) to ensure that there is an adequate gas supply to perform gas actions. Depending on the configuration of the gas system, pressures of below 20 bar (abs.) may be critical.

- Gases as specified (see Section 4.3 on page 72), Gas cylinders with a remaining pressure of at least 10 bar (abs.)

Preconditions

- Laser device switched on and laser ready to operate (laser radiation not being emitted)
- Inert gas supply open and pressure regulator set to at least 4 bar (abs.)

Emergency Fill Procedure

1. Press <F6>.
   The bottom line of the handheld keypad display shows the available options.
2. Use the cursor keys to select MANUAL INERT.
3. Press ENTER to confirm the selection.
4. Press <EXE> to start the manual fill with inert gas.
   The laser heasd valve and the inert gas valvle open for 10 seconds and then automatically close. The new pressure will be displayed. If a higher pressure is necessary, repeat step 4.

A0409LPX

A0409LPX

7 MAINTENANCE

This chapter describes the routine maintenance of the LPX*Pro* laser device. Follow the recommended service intervals and procedures to ensure optimum performance. The necessary maintenance procedures are outlined in a maintenance schedule in Section 7.2 (page 148) before being described in detail in the subsequent sections.



WARNING
Risk of serious injury or damage!
Always switch off the laser device to perform maintenanence, servicing and repair work.
When the laser device switched has to remain switched on to perform maintenance work, always ensure that the maintenance area is adequately secured and marked and that unauthorized persons cannot gain access to the laser device.
All persons in the maintenance area have to be fully familiar with the appropriate sefaty regulations and requirements .

7.1 Laser Logbook

Prepare a laser logbook to keep a continuous record of data relating to laser operations. This simplifies routine maintenance scheduling as well as troubleshooting.

The data recorded in the logbook should provide information about relevant changes in the operating behaviour of the device. The logbook should include the following entries:

– Date and time
– Running mode (HV, EGY PGR, EGY NGR)
– Charging voltage and beam output energy
– Operating mode (OPMODE)
– Trigger mode
– Repetition rate
– Status (Gas actions, warnings, interlocks etc.)
– Counter reading (total counter).

A0409LPX

7.2 Maintenance Schedule

This section contains the periodic and event related maintenance schedule for the LPX*Pro* laser device. The information is presented in a form that allows the routine maintenance of the laser device to be exactly coordinated with the routine maintenance of other components in the system to which the laser device is connected.

Maintenance Interval	Action	Time Required	Comments
- Every 5 to 20 million pulses[a] - Every 1 to 3 weeks[b]	New gas fill	0.5 h	see Section 7.5.1 on page 168
- Before a new gas fill - After a week of non-operation	Flush gas lines	0.1 h	see Section 7.4.1 on page 155
- Every 15 to 40 million pulses - Every 3 to 5 new gas fills	Clean tube windows	1.0 h	See Section 7.6 on page 175
- After cleaning the tube windows five times	Renew tube windows	1.0 h	
- Every 50 to 100 million pulses	Renew mirrors	1.0 h	
- Whenever the tube windows have been cleaned / exchanged	Align laser beam	1.0 h	See Section 7.8 on page 201
	Calibrate energy monitor	0.25 h	See Section 7.7.1 on page 193
- With every energy monitor calibration	Clean beam splitter	0.5 h	See Section 7.7 on page 193
- After cleaning the beam splitter five times[c]	Renew beam splitter	1.0 h	
- Every 4 weeks - Before a new gas fill	Check halogen filter level	0.05 h	See Section 7.10.1 on page 209
- When indicated by the laser control software	Replace halogen filter	0.25 h	See Section 7.10.2 on page 210
- Every 300 million pulses	Check / adjust thyratron	0.25 h	See Section 7.9 on page 205
- If pressure in the gas cylinder drops below 10 bar	Change halogen gas cylinder	0.75 h	See Section 7.4.3 on page 158
- When gas cylinder has passed expiry date	Change rare, inert or buffer gas cylinder	0.5 h	See Section 7.4.4 on page 163
- Before transportation - Before storage	Perform transportation fill	0.25 h	See Section 7.11.1 on page 214

a. Typical values for dynamic gas lifetime. XeCl lifetime tends to be greater than the other gases
b. Typical values for static gas lifetime. XeCl lifetime tends to be greater than the other gases
c. With ArF every 3rd time

A0409LPX

7.3 Preparatory Procedures

This section describes in detail procedures required to prepare the LPX*Pro* excimer laser device for servicing work or re-enable laser operation after completing servicing work.

7.3.1 Lockout / Tagout

Purpose

This procedure establishes the minimum requirements for the lockout of energy isolating devices whenever maintenance or servicing is performed on the LPX*Pro* laser device. It shall be used to ensure that the laser device is stopped, isolated from all potentially hazardous energy sources and locked out before employees perform any servicing or maintenance where the unexpected energization or start-up of the laser device or release of stored energy could cause injury.



WARNING
Risk of serious injury!
All employees are required to comply with the restrictions and limitations imposed upon them during the use of lockout. The authorized employees are required to perform the lockout in accordance with the procedures described in this section.
All employees, upon observing a machine or piece of equipment which is locked out to perform servicing or maintenance shall not attempt to start, energize or use that machine or equipment.

The potentially hazardous energy sources of the LPX*Pro* are:

– High voltage / electric energy

– Laser light

– Compressed gases

To perform maintenance or servicing within the laser device, these hazardous energy sources are isolated by setting the laser device's main switch to the OFF position. When working with an open gas system, e.g. when disconnecting the laser device from the gas supply or working on the gas supply lines (up to and including the solenoid valves), the external gas supply also has to be shut off and locked out / tagged out.

A0409LPX

Tools and Materials

- Assigned individual lockout and/or tagout devices suitable for use with the respective energy isolating device.

NOTE
The assigned lockout / tagout device shall correspond with OSHA 29 CFR 1910.147(c)(5), i.e. it is to be durable, of a standardized type within the facility, substantial enough to prevent removal without the use of excessive force or unusual techniques and shall indicate the identity of the person applying the device.

Securing the Main Switch

1. Notify all responsible persons that the the LPX*Pro* laser device requires servicing or maintenance and that it must be shut down and locked out to perform the servicing or maintenance.
2. If the laser device is operating, shut it down by following the usual shut down sequence (see Section 6.2.6 on page 133).
3. Ensure that the main switch is set to "OFF" (see Figure 71) so that the laser device is isolated from the potentially hazardous energy sources.

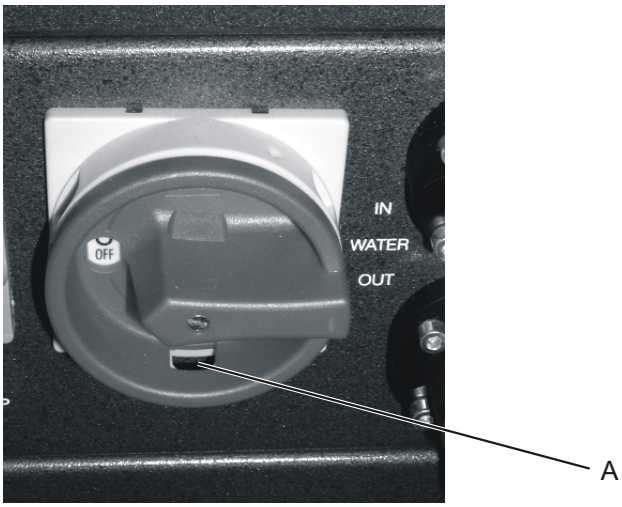

Figure 71: *Main switch lockout*

4. Lockout the main switch by inserting the assigned lockout device into the opening in the bottom of the main switch (see Figure 71, A).

NOTE
The lockout device can only be inserted when the main switch is in the "OFF " position.

A0409LPX

5. Dissipate any stored or residual energy by following the specific instructions in the respective service or maintenance procedure; e.g. when working on the HV system (which contains a thyratron), always insert the grounding stick and allow the capacitors to discharge before starting work (see Figure 72).

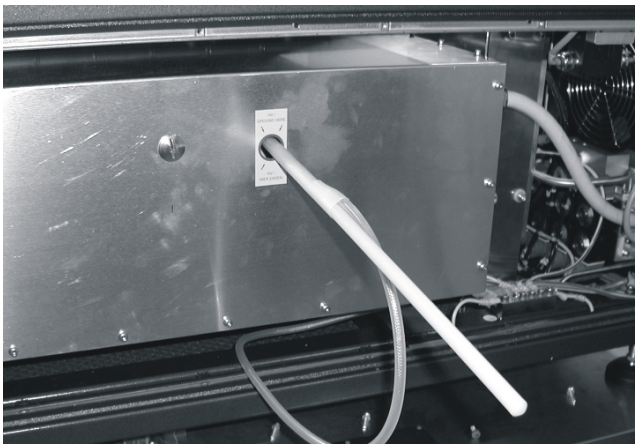

Figure 72: *Discharging the capacitors*

6. Ensure that the laser device is disconnected from the energy source and isolated by turning the key switch and making certain that the laser device will not operate.
7. Depending on local regulations, attach appropriate tags to warn that maintenance or servicing is being performed and indicate the identity of the person who applied the lockout device.

   The main switch of the laser device is now locked out. The necessary maintenance or servicing can now be performed. If, however, work is to be carried out on an open gas system, always perform steps 8 to 11 prior to starting the maintenance or servicing work.

Securing the Gas Supply Lines

NOTE
Steps 8 to 11 are generally applicable when the external gas supply lines are to be isolated to perform work on the LPX*Pro* excimer laser device. The exact procedure to de-energize and secure the gas supply lines depends on the configuration of the facility's gas supply system and design of the shut off valves.. Always first contact the person authorized to perform the gas system lockout/tagout procedure when work an open gas system is necessary.

8. Notify the responsible persons that servicing or maintenance is required on the LPX*Pro* laser device and that the gas supply lines leading to the laser device must be shut down and locked out to perform the servicing or maintenance.

9. Turn off the shut off valve (e.g. ball or gate valve) and secure the valve by installing the appropriate valve cover, lock and/or tag.

NOTE
Fluorine gas lines require double valve isolation for maintenance on the gas system.

10. Evacuate the gas lines between the shut off valve and gas manifold in the laser device.
11. Ensure that the appropriate gas pressure gauges indicate a reading of zero before starting the maintenance or servicing.

Restoring the Laser Device to Service

NOTE
When the servicing or maintenance is completed and the LPX*Pro* excimer laser device is ready to return to the normal operating condition, follow steps 12 to 15.

12. Check the laser device and the immediate area around the laser device to ensure that nonessential items have been removed and that the laser device is operationally intact.
13. Check the work area to ensure that all employees have been safely positioned or removed from the area.
14. Remove the lockout device.

NOTE
The lockout device shall be removed from the energy isolating device by the person who applied the device. If the authorized person who applied the device is not available, contact the supervisor of the person who applied the device.

15. Notify the responsible persons that the servicing or maintenance is completed and that the laser device can be switched on and restored to service.

A0409LPX

7.3.2 Handling Housing Covers

7.3.2.1 Front and Rear Service Panels

Purpose

Remove the front (B) and/or rear (A) service panel(s) from the laser head (see Figure 73). This provides the necessary access to the working area for most maintenance procedures (e.g. removing / installing optics, exchanging the halogen filter).

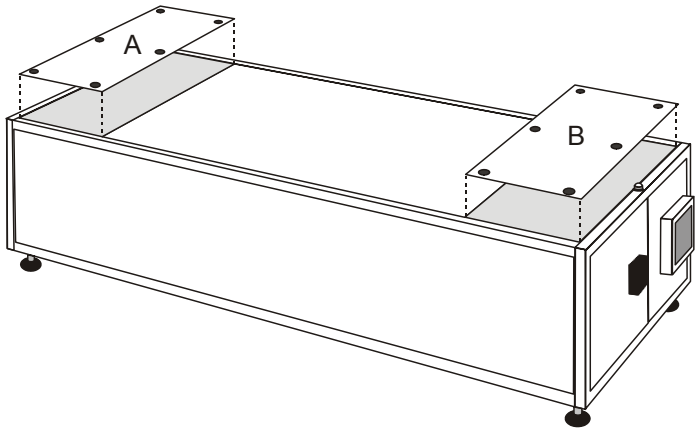

Figure 73: *Laser head service panels*

Tools and Materials

- Housing key

Preconditions

- Laser device switched off and locked out / tagged out (see Section 7.3.1 on page 149)

Removing the Service Panel

1. Use the housing key to unlock the service panel.
2. Insert the housing key into the lifting slot in the service panel and turn it a quarter of a turn.
3. Pull the service panel with the housing key upwards and out of the laser head.

Fitting the Service Panel

4. Locate the service panel in the appropriate position on the laser head.
5. Remove the housing key from the lifting slot.
6. Use the housing key to lock the service panel.

A0409LPX

7.3.2.2 Side, Front, Rear and Top Covers

Purpose

Remove the appropriate side, top, front or rear cover from the laser head to enable a specific maintenance procedure to be performed (e.g. adjust thyratron control voltage).

NOTE
When removing the long side or top covers, it is advisable to obtain the assistance of an additional person.

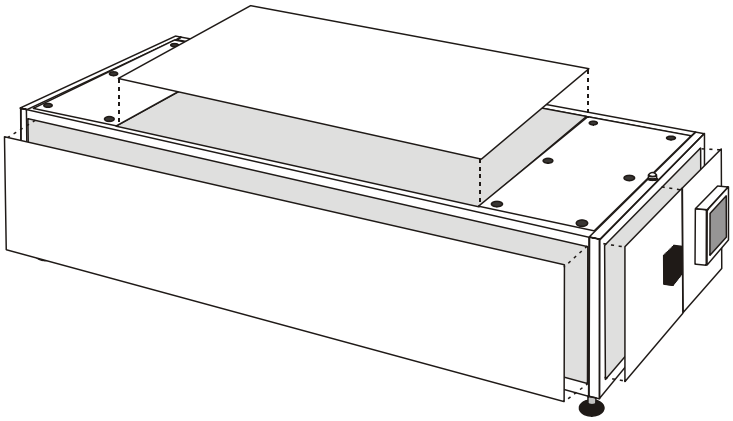

Figure 74: *Laser head front, side and top covers*

Tools and Materials

- 3 mm allen key (powered tool recommended)

Preconditions

- Laser device switched off and locked out / tagged out (see Section 7.3.1 on page 149)

Removing the Cover

1. Use the 3 mm allen key to loosen the screws securing the cover.
2. Remove the screws securing the cover, except for the last screw.
3. Hold the cover while removing the last screw and allow the cover to slowly tilt away from the laser head.
4. Holding the cover in both hands, lift it away from the laser head.

Fitting the Cover

5. Holding the cover at an angle, carefully guide it into the corresponding locating recess.
6. Press the cover at the top so that it is correctly located onto the laser head.
7. Use the 3 mm allen key to insert and tighten the securing screws.

A0409LPX

7.4 Gas System Maintenance

This section describes the procedures that are to be followed to maintain the external gas system. The condition of the external gas system and the gases has a direct influence on the operating performance of the excimer laser.

NOTE
The instructions in this section apply for a straight-forward gas system with one gas source for one laser device. In industrial environments, the LPX*Pro* may be connected to an external gas handling system that serves a number of laser devices. Therefore, always consult the gas handling system supplier's instructions before performing any of the actions described in this section.

7.4.1 Flush Gas Line

Purpose

Evacuate a gas line and fill the line with fresh gas. This is, for example, necessary to remove helium from the gas line after a leak test or after starting the laser following a week of non-use or to remove impurities in the gas line after exchanging a gas cylinder.

Maintenance Interval

- Before a new gas fill
- After a week of non-operation

Time Required

- 0.1 h

Tools and Materials



CAUTION
Incorrect handling will cause unnecessary downtime!
Only use gas cylinders with a remaining pressure of more than 10 bar (abs.) to ensure that there is an adequate gas supply to perform gas actions. Depending on the configuration of the gas system, pressures of below 20 bar (abs.) may be critical.

- Gases as specified (see Section 4.3 on page 72). Gas cylinders with a remaining pressure of at least 10 bar (abs.)

A0409LPX

Preconditions



CAUTION
The laser device is to remain powered up during this procedure!
Ensure that the maintenance area is at all times adequately secured and that no unauthorized persons can access the laser device.
All persons in the maintenance area shall be fully familiar with the applicable safety regulations and requirements

- Laser device switched on and laser ready to operate (no radiation being emitted).
- Gas cylinder valves open and pressure regulators correspondingly set (for secondary pressures see Section 4.3 on page 72)

Evacuating the Gas Line

1. Close the corresponding gas cylinder valve.
2. Ensure that the pressure regulator in the gas line is open.
3. Press <FLUSH LINE> on the handheld keypad.
   “FLUSH: *current selection* (INERT, BUFFER, RARE, HAL.)” appears in the bottom line of the display
4. Press <Cursor Right> and/or <Cursor Left> to select the desired gas line.
5. Press <ENTER> to confirm the selection.
6. Press <EXE> to evacuate the selected gas line between the laser head valve and the gas cylinder valve.
   The message ”FLUSH: *current selection* L.“ appears in the bottom line of the display.

   The vacuum pump runs for two seconds to evacuate the gas line.

NOTE
Depending on the length of the gas line, this procedure has to be repeated until the gas line is completely evacuated.

Filling the Gas Line with Fresh Gas

7. Open the gas cylinder valve that was closed in step 1.
8. Repeat the procedure at least once with the gas supply open (i.e. from step 2) to completely fill the line.

7.4.2 Purge Gas Line

Purpose

Evacuate the gas line for five seconds and then fill the line with the gas connected to the INERT connection (helium). This is, for example, necessary to perform a leak test with a helium leak tester or to remove impurities from the system when the laser is not used for a number of days.

A0409LPX

Tools and Materials



CAUTION
Incorrect handling will cause unnecessary downtime!
Only use gas cylinders with a remaining pressure of more than 10 bar (abs.) to ensure that there is an adequate gas supply to perform gas actions. Depending on the configuration of the gas system, pressures of below 20 bar (abs.) may be critical.

- Gases as specified (see Section 4.3 on page 72). Gas cylinders with a remaining pressure of at least 10 bar (abs.)

Preconditions



CAUTION
The laser device is to remain powered up during this procedure!
Ensure that the maintenance area is at all times adequately secured and that no unauthorized persons can access the laser device.
All persons in the maintenance area shall be fully familiar with the applicable safety regulations and requirements

- Laser device switched on and laser ready to operate (no radiation being emitted).
- Gas cylinder valves open and pressure regulators correspondingly set (for secondary pressures see Section 4.3 on page 72)

NOTE
When the gas supply is closed, the message ”NO GAS FLOW“ appears when purging the line.

Purging the Gas Line

1. Close the pressure regulator in the gas line that is to be purged.
2. Ensure that the inert gas cylinder valve is open and the pressure regulator is set to at least 4 bar (abs.).

NOTE
The pressure regulator has to be set to at least 4 bar to completely purge the line between the gas cylinder valve and the laser head. With lower pressure settings, residues may remain in the line between the pressure regulator and the gas cylinder valve.

3. Press <PURGE LINE> on the handheld keypad.
   “PURGE: *current selection* (INERT, BUFFER, RARE, HAL.)” appears in the bottom line of the display.
4. Press <Cursor Right> and/or <Cursor Left> to select the desired gas line.
5. Press <ENTER> to confirm the selection.

A0409LPX

6. Press <EXE> to start the purging procedure.
   The message “PURGE: *current selection*“ appears in the bottom line of the display. “OFF” appears in the display when the line purging has been completed.

NOTE
A) Depending on the length of the gas line, this procedure has to be repeated until the gas line is completely purged.
B) Before restarting laser operation, the gas line has to be completely filled with the appropriate gas for the line (see Section 7.4.1 on page 155).

7.4.3 Exchange Halogen Gas Cylinder

Purpose

Replace exhausted or expired halogen gas cylinders with fresh gas cylinders.

NOTE
After exchanging the gas cylinder, use inert gas to check the corresponding line for leaks.

Maintenance Interval

- If pressure in the gas cylinder drops below 10 bar

NOTE
To ensure that there is adequate gas pressure for all gas activities, it is recommended that the gas cylinder be exchanged when the remaining pressure drops below 20 bar.

- When gas cylinder has passed expiry date

Time Required

- 0.75 h

A0409LPX

Tools and Materials

- Appropriate wrench to disconnect/re-connect gas cylinders
- Stainless steel cap (e.g. laser device's gas line blanking plug removed during the installation) for sealing the halogen line
- Helium leak tester or liquid leak tester (e.g. SNOOP®)

NOTE
Make sure that the chosen leak tester is suitable for use in the environment in which the laser is installed. Liquid leak testers are, for instance, not permitted in cleanrooms.

- Ethanol and cleaning paper (when SNOOP® was used)



CAUTION
Incorrect handling will cause unnecessary downtime!
Only use gas cylinders with a remaining pressure of more than 10 bar (abs.) to ensure that there is an adequate gas supply to perform gas actions. Depending on the configuration of the gas system, pressures of below 20 bar (abs.) may be critical.

- Gases as specified (see Section 4.3 on page 72). Gas cylinders with a remaining pressure of at least 10 bar (abs.)

Preconditions



CAUTION
The laser device is to remain powered up during this procedure!
Ensure that the maintenance area is at all times adequately secured and that no unauthorized persons can access the laser device.
All persons in the maintenance area shall be fully familiar with the applicable safety regulations and requirements.

- Laser device switched on and laser ready to operate (no radiation being emitted).
- Pressure regulators and cylinder valves in each gas line closed.

A0409LPX

Evacuating the Halogen Line



CAUTION
Incorrect operation can damage the pressure regulator!
If pressure is applied to a pressure regulator with low secondary pressure, the pressure regulator membrane may become damaged. Always ensure that the pressure regulator is closed, before opening the gas cylinder valve.

1. Open the halogen gas cylinder valve.
2. Set the pressure regulator in the halogen line to at least 4 bar (abs.).

NOTE
The pressure regulator has to be set to at least 4 bar to completely evacuate the line between the gas cylinder valve and the laser head. With lower pressure settings, residues may remain in the line between the pressure regulator and the gas cylinder valve.

3. Close the halogen gas cylinder valve.
4. Evacuate the halogen gas line without refilling it (see Section 7.4.1 on page 155).

Purging the Halogen Gas Line



WARNING
Health hazard through halogen gases !
The halogen gas line to an excimer laser contains a mixture of up to 5% fluorine gas or 0.5% hydrogen chloride.
Always purge the halogen gas line before separating it. Avoid breathing in or skin contact with halogen gases.

5. Open the inert gas cylinder valve.
6. Set the pressure regulator in the inert line to at least 4 bar (abs.).

NOTE
The pressure regulator has to be set to at least 4 bar to completely purge the line between the gas cylinder valve and the laser head. With lower pressure settings, residues may remain in the line between the pressure regulator and the gas cylinder valve.

7. Purge the halogen gas line at least four times (see Section 7.4.2 on page 156). The halogen gas line is now free of halogen so that the gas cylinder can now be changed.

Exchanging the Halogen Gas Cylinder

8. Close the pressure regulator and gas cylinder valve.

A0409LPX

9. Separate the gas line from the gas cylinder.

NOTE
Depending on the manufacturers instructions, the pressure regulator may also have to be exchanged.



CAUTION
Risk of corrosion!
The halogen gas line is not to be left open for more than two minutes. Always seal the halogen line with a stainless steel cap when the line is to be separated for a longer period.

10. Seal the halogen line with a stainless steel cap to prevent corrosion.
11. Exchange the halogen gas cylinder.
12. Remove the stainless steel cap from the halogen line.



CAUTION
Risk of gas leaks!
When using gaskets to seal the gas lines, always use new (unused) gaskets..

13. Screw the line fittings to the halogen gas cylinder or alternatively to the pressure regulator if this was exchanged together with the gas cylinder.

Checking the Ga s Line for Vacuum Leak Tightness

14. Ensure that the pressure regulators and cylinder valves are closed on all gas lines.
15. Open the halogen gas cylinder valve.
16. Set the pressure regulator in the halogen line to at least 4 bar (abs.).

NOTE
The pressure regulator has to be set to at least 4 bar to completely evacuate the line between the gas cylinder valve and the laser head. With lower pressure settings, residues may remain in the line between the pressure regulator and the gas cylinder valve.

17. Close the halogen gas cylinder valve.
18. Press <FLUSH LINE> on the handheld keypad.
    “FLUSH: *current selection* (INERT, BUFFER, RARE, HAL.)” appears in the bottom line of the display
19. Press <Cursor Right> and/or <Cursor Left> to select HAL (halogen).
20. Press <ENTER> to confirm the selection.

A0409LPX

21. Press <EXE> to evacuate the selected gas line between the laser head valve and the gas cylinder valve.
    The message ”FLUSH: HAL.“ appears in the bottom line of the display.

    The vacuum pump runs for two seconds to evacuate the gas line.
22. Repeat step 21 until the pressure regulator gauge indicates a relatively constant vacuum.

NOTE
If a vacuum is not reached there is a relatively large leak in the gas line. Check all connections in the line. If necessary, tighten the connections and repeat the evacuation of the gas line.

23. After appoximately 10 minutes, check the pressure regualator gauge again. A significant increase in pressure indicates a leak.
24. If there is a leak, tighten the connections and, where necessary, exchange the sealing ring. Following this, repeat the leak test.

Checking the Gas Line for Overpressure Leak Tightness

25. Open the inert gas cylinder valve.
26. Set the pressure regulator in the inert gas line to the specified value (see Section 4.3 on page 72).
27. Press <PURGE LINE> on the handheld keypad.
    “PURGE: *current selection* (INERT, BUFFER, RARE, HAL.)” appears in the bottom line of the display.
28. Press <Cursor Right> and/or <Cursor Left> to select HAL. (halogen).
29. Press <ENTER> to confirm the selection.
30. Press <EXE> to start the purging procedure.
    The message “PURGE: HAL.“ appears in the bottom line of the display.

    The halogen gas line and the internal gas system are evacuated and filled with inert gas (He).

NOTE
Depending on the configuration of the gas system, the command has to be repeated until the gas line is completely purged.

31. Use a leak tester to check the gas line connections for leaks .
32. If there is a leak, tighten the connections and, where necessary, exchange the sealing ring. Following this, repeat the leak test

Cleaning, Refilling and Passivating the Gas Line

33. Close the pressure regulator in the halogen line.
34. Open the halogen gas cylinder valve.
35. Set the pressure regulator in the halogen gas line to the specified value (see Section 4.3 on page 72).

A0409LPX

36. Press <FLUSH LINE> on the handheld keypad.
    "FLUSH: *current selection* (INERT, BUFFER, RARE, HAL.)" appears in the bottom line of the display
37. Press <Cursor Right> and/or <Cursor Left> to select HAL (halogen).
38. Press <ENTER> to confirm the selection.
39. Press <EXE> a number of times to clean the halogen gas line. The halogen line is evacuated and at the same time refilled with fresh gas.
40. Leave the halogen gas in the gas line for approx. 15 minutes.
41. After waiting approx. 15 minutes, press <EXE> again to fill the halogen line with fresh gas.

NOTE
Depending on the configuration of the gas system, the command has to be repeated until the gas line is completely filled.

Finalization

42. When SNOOP® was used, clean the gas line connections with ethanol and wipe dry with cleaning paper.
43. Set the gas cylinder valves and pressure regulators to the settings required for the next laser operation (closed for NGR, open and correctly set for PGR).

7.4.4 Exchange Rare, Buffer or Inert Gas Cylinder

Purpose

Replace exhausted or expired rare, buffer or inert gas cylinders with fresh gas cylinders.

NOTE
After exchanging the gas cylinder, use inert gas to check the each line for leaks instead of expensive rare or buffer gases .

Maintenance Interval

- If pressure in the gas cylinder drops below 10 bar

NOTE
To ensure that there is adequate gas pressure for all gas activities, it is recommended that the gas cylinder be exchanged when the remaining pressure drops below 20 bar.

- When gas cylinder has passed expiry date

Time Required

- 0.5 h

A0409LPX

Tools and Materials

- Appropriate wrench to disconnect/reconnect gas cylinders
- Stainless steel cap (e.g. laser device's gas line blanking plug removed during the installation) for sealing the halogen line
- Helium leak tester or liquid leak tester (e.g. SNOOP®)

NOTE
Make sure that the chosen leak tester is suitable for use in the environment in which the laser is installed. Liquid leak testers are, for instance, not permitted in cleanrooms.

- Ethanol and cleaning paper (when SNOOP® was used)



CAUTION
Incorrect handling will cause unnecessary downtime!
Only use gas cylinders with a remaining pressure of more than 10 bar (abs.) to ensure that there is an adequate gas supply to perform gas actions. Depending on the configuration of the gas system, pressures of below 20 bar (abs.) may be critical.

- Gases as specified (see Section 4.3 on page 72). Gas cylinders with a remaining pressure of at least 10 bar (abs.)

Preconditions



CAUTION
The laser device is to remain powered up during this procedure!
Ensure that the maintenance area is at all times adequately secured and that no unauthorized persons can access the laser device.
All persons in the maintenance area shall be fully familiar with the applicable safety regulations and requirements

- Laser device switched on and laser ready to operate (no radiation being emitted).
- Pressure regulators and cylinder valves in each gas line closed.

A0409LPX

Evacuating the Gas Line



CAUTION
Incorrect operation can damage the pressure regulator!
If pressure is applied to a pressure regulator with low secondary pressure, the pressure regulator membrane may become damaged. Always ensure that the pressure regulator is closed, before opening the gas cylinder valve.

1. Open the corresponding gas cylinder valve.
2. Set the pressure regulator in the corresponding gas line to at least 4 bar (abs.).

NOTE
The pressure regulator has to be set to at least 4 bar to completely evacuate the line between the gas cylinder valve and the laser head. With lower pressure settings, residues may remain in the line between the pressure regulator and the gas cylinder valve.

3. Close the corresponding gas cylinder valve.
4. Evacuate the corresponding gas line without refilling it (see Section 7.4.1 on page 155).

Exchanging the Gas Cylinder

5. Close all pressure regulators and gas cylinder valves.
6. Separate the gas line from the gas cylinder.

NOTE
Depending on the manufacturers instructions, the pressure regulator may also have to be exchanged.

7. Exchange the gas cylinder.



CAUTION
Risk of gas leaks!
When using gaskets to seal the gas lines, always use new (unused) gaskets.

8. Screw the line fittings to the corresponding gas cylinder or alternatively to the pressure regulator if this was exchanged together with the gas cylinder.

Checking the Gas Line for Vacuum Leak Tightness

9. Ensure that the pressure regualtors and cylinder valves are closed on all gas lines.
10. Open the corresponding gas cylinder valve.

A0409LPX

11. Set the pressure regulator in the corresponding line to at least 4 bar (abs.).

NOTE
The pressure regulator has to be set to at least 4 bar to completely evacuate the line between the gas cylinder valve and the laser head. With lower pressure settings, residues may remain in the line between the pressure regulator and the gas cylinder valve.

12. Close the corresponding gas cylinder valve.
13. Press <FLUSH LINE> on the handheld keypad.
    “FLUSH: *curre nt selection* (INERT, BUFFER, RARE, HAL.)” appears in the bottom line of the display
14. Press <Cursor Right> and/or <Cursor Left> to select the desired gas line.
15. Press <ENTER> to confirm the selection.
16. Press <EXE> to evacuate the selected gas line between the laser head valve and the gas cylinder valve.
    The message ”FLUSH: *current selection*“ appears in the bottom line of the display.

    The vacuum pump runs for two seconds to evacuate the gas line.
17. Repeat step 16 until the pressure regulator gauge indicates a relatively constant vacuum.

NOTE
If a vacuum is not reached there is a relatively large leak in the gas line. Check all connections in the line. If necessary, tighten the connections and repeat the evacuation of the gas line.

18. After appoximately 10 minutes, check the pressure regualator gauge again. A significant increase in pressure indicates a leak.
19. If there is a leak, tighten the connections and, where necessary, exchange the sealing ring. Following this, repeat the leak test.

Checking the Gas Line for Overpressure Leak Tightness

20. Open the inert gas cylinder valve.
21. Set the pressure regulator in the inert gas line to the specified value (see Section 4.3 on page 72).
22. Press <PURGE LINE> on the handheld keypad.
    “PURGE: *current selection* (INERT, BUFFER, RARE, HAL.)” appears in the bottom line of the display.
23. Press <Cursor Right> and/or <Cursor Left> to select the desired gas line.
24. Press <ENTER> to confirm the selection.

A0409LPX

25. Press <EXE> to start the purging procedure.
    The message “PURGE: *current selection*“ appears in the bottom line of the display. The corresponding gas line and the internal gas system are evacuated and filled with inert gas (He).

NOTE
Depending on the configuration of the gas system, the command has to be repeated until the gas line is completely purged.

26. Use a leak tester to check the gas line connections for leaks .
27. If there is a leak, tighten the connections and, where necessary, exchange the sealing ring. Following this, repeat the leak test

Cleaning, Refilling and Passivating the Gas Line

28. Close the pressure regulator in the corresponding line.
29. Open the corresponding gas cylinder valve.
30. Set the pressure regulator in the corresponding gas line to the specified value (see Section 4.3 on page 72).
31. Press <FLUSH LINE> on the handheld keypad.
    “FLUSH: *current selection* (INERT, BUFFER, RARE, HAL.)” appears in the bottom line of the display
32. Press <Cursor Right> and/or <Cursor Left> to select the desired gas line.
33. Press <ENTER> to confirm the selection.
34. Press <EXE> a number of times to clean the gas line.
    The corresponding line is evacuated and at the same time refilled with fresh gas.

NOTE
Depending on the configuration of the gas system, the command has to be repeated until the gas line is completely filled.

Finalization

35. When SNOOP® was used, clean the gas line connections with ethanol and wipe dry with cleaning paper.
36. Set the gas cylinder valves and pressure regulators to the settings required for the next laser operation (closed for NGR, open and correctly set for PGR).

A0409LPX

7.5 Laser Tube Maintenance

7.5.1 New Fill

Purpose

Evacuate spent excimer laser gases from the laser tube and fill the laser tube with the appropriate fresh excimer laser gases. The laser tube is automatically evacuated and filled to the required pressure through the dedicated software routine “NEW FILL”. The exact gas mixture is determined through the currently active gas menu.

The gas lifetime is largely dependent on the operating conditions. The frequency with new fills are required should be recorded so that you can prepare a maintenance schedule specific to your individual requirements. Note the date and total counter reading at which each new fill is made in your laser logbook.

The following situations will reduce the laser gas lifetime:

– the laser tube has just been passivated,

– the first fill after a period of weeks without laser operation,

– a different wavelength has been selected,

– the laser tube optics are contaminated,

– high energy values in the EGY CONST mode.

Maintenance Interval

- Every 5 to 20 million pulses
- Every 1 to 3 weeks

A new gas fill is also recommended:

- If beam output energy is too low for your application
- After a warning or error message ”PRESET ENERGY TOO HIGH“, “NEW GAS FILL NEEDED“ or “LOW LIGHT“
- Before calibrating the energy monitor
- After re-passivating the laser tube

Time Required

- 0.5 h

A0409LPX

Tools and Materials



CAUTION
Incorrect handling will cause unnecessary downtime!
Only use gas cylinders with a remaining pressure of more than 10 bar (abs.) to ensure that there is an adequate gas supply to perform gas actions. Depending on the configuration of the gas system, pressures of below 20 bar (abs.) may be critical.

- Gases as specified (see Section 4.3 on page 72). Gas cylinders with a remaining pressure of at least 10 bar (abs.)

Preconditions



CAUTION
The laser device is to remain powered up during this procedure!
Ensure that the maintenance area is at all times adequately secured and that no unauthorized persons can access the laser device.
All persons in the maintenance area shall be fully familiar with the applicable safety regulations and requirements

- Laser device switched on and laser ready to operate (no radiation being emitted).
- Gas cylinder valves open and pressure regulators correspondingly set (for secondary pressures see Section 4.3 on page 72)
- No impurities in the laser tube or gas lines

NOTE
When the laser has not been run for more than a month, flush the gas lines to remove any impurities (see Section 7.4.1 on page 155).

Evacuating and Filling the Laser Tube

1. Turn on the excimer laser gases and set the pressure regulator in each line to the required pressure (see Section 6.2.2 on page 124).
2. Press <NEW FILL> on the handheld keypad.
   "> NEW FILL" appears in the bottom line of the display.
3. Press <ENTER> to confirm that a new fill is to be started.

A0409LPX

4. Press <EXE> to start the NEW FILL procedure.

NOTE
Only interrupt the procedure with <BREAK> in case of an emergency. As the procedure is immediately interrupted and the fill is incomplete, there may be insufficient pressure in the laser tube. In this case, manually fill the laser tube to 1050 mbar with inert gas (see Section 6.6.2 on page 145) or restart the new fill procedure.

At the start of the new fill, the halogen filter ratio is checked. If it exceeds 99 %, the message „RENEW HALOGEN FILTER“ is displayed and the NEW FILL procedure terminates. Replace the halogen filter.

The vacuum pump starts to evacuate the tube, the current pressure and the message “NEW FILL, EVAC“ are displayed. After reaching 30 mbar the vacuum pump stops. The laser then enters a two minute stand-by phase for a laser tube gas leak check. The message “NEW FILL, WAIT“ is displayed. If everything is all right, the message changes to “NEW FILL, FILL“. The individual gases are then filled into the laser tube at the partial pressures indicated in the gas menu. “OFF” appears in the display when the new fill has been completed.



CAUTION
Penetration of atmospheric oxygen can damage the laser tube! Evacuation of the laser tube was most likely inhibited by a leak. Each attempt to evacuate a leaking laser tube allows atmospheric oxygen to penetrate the laser tube. Always locate and rectify a leak before continuing the new fill.

If the evacuation fails, the message “SAFETY FILL“ appears and a safety fill is performed. This automatically fills the laser tube to 1050 mbar with the gas connected to the buffer gas connection.

7.5.2 Manual Halogen Injection

Purpose

Manually inject halogen gas into the laser tube to, for instance, compensate for a drop in output power. The amount of gas injected is determined in the gas menu.

NOTE
A) This function can only be performed when the laser is supplied from separate gas cylinders.
B) If there is no improvement in laser performance after the manual halogen injection, always carry out a new fill (see Section 7.5.1).

A0409LPX

Tools and Materials



CAUTION
Incorrect handling will cause unnecessary downtime!
Only use gas cylinders with a remaining pressure of more than 10 bar (abs.) to ensure that there is an adequate gas supply to perform gas actions. Depending on the configuration of the gas system, pressures of below 20 bar (abs.) may be critical.

- Halogen gas as specified (see Section 4.3 on page 72). Gas cylinder with a remaining pressure of at least 10 bar (abs.)

Preconditions



CAUTION
The laser device is to remain powered up during this procedure!
Ensure that the maintenance area is at all times adequately secured and that no unauthorized persons can access the laser device.
All persons in the maintenance area shall be fully familiar with the applicable safety regulations and requirements

- Laser device switched on and laser ready to operate (no radiation being emitted).
- Halogen gas cylinder valve open and pressure regulator correspondingly set (for secondary pressure see Section 4.3 on page 72)

Injecting Halogen Gas

1. Press <F7> on the handheld keypad.
2. Press <ENTER> to confirm that a halogen injection is to be started.
3. Press <EXE> to start the halogen injection.
   The laser head valve and halogen valve open for two seconds and then automatically close again.

7.5.3 Purge Laser Tube

Purpose

Replace the laser gas in the laser tube with inert gas. The “purge reservoir” procedure evacuates the laser tube and fills it to 1050 mbar with the gas that is connected to the inert gas line.

NOTE
The <PURGE RESERVOIR> key calls two different procedures: reservoir purging and window exchange. The window exchange procedure is described in Section 7.6.1 on page 176.

A0409LPX

Maintenance Interval

Purging the laser tube is recommended:

- When the laser was not in use for more than one month
- After repairing a leak in the laser tube.

Tools and Materials



CAUTION
Incorrect handling will cause unnecessary downtime!
Only use gas cylinders with a remaining pressure of more than 10 bar (abs.) to ensure that there is an adequate gas supply to perform gas actions. Depending on the configuration of the gas system, pressures of below 20 bar (abs.) may be critical.

- Inert gas as specified (see Section 4.3 on page 72). Gas cylinder with a remaining pressure of at least 10 bar (abs.)

Preconditions



CAUTION
The laser device is to remain powered up during this procedure!
Ensure that the maintenance area is at all times adequately secured and that no unauthorized persons can access the laser device.
All persons in the maintenance area shall be fully familiar with the applicable safety regulations and requirements

- Laser device switched on and laser ready to operate (no radiation being emitted).
- Inert gas cylinder valve open and pressure regulator correspondingly set (for secondary pressure see Section 4.3 on page 72)

Purging the Tube with Inert Gas

1. Close all pressure regulators and gas cylinder valves.
2. Open the valve on the inert gas cylinder.
3. Set the pressure regulator in the inert gas line to the required pressure.
   The gas pressures are indicated in Section 4.3. on page 72.
4. Press <PURGE RESERVOIR>.
5. Where necessary, press cursor left or cursor right to select “PURGE RES”.
6. Press <ENTER> to confirm the choice.

A0409LPX

7. Press <EXE> to proceed. The message ”FLUSHING...“ appears.

   The vacuum pump starts to evacuate the laser tube. After reaching 30 mbar, the vacuum pump stops, inert gas valve opens and the tube is filled to 1050 mbar with inert gas.

NOTE
Only interrupt the procedure with <BREAK> in case of an emergency. As the procedure is immediately interrupted and the fill is incomplete, there may be insufficient pressure in the laser tube. In this case, manually fill the laser tube to 1050 mbar with inert gas (see Section 6.6.2 on page 145) or restart the purging procedure.

Finalization

8. Carry out a new fill before restarting laser operation (see Section 7.5.1).

7.5.4 Re-Passivate Laser Tube

Purpose

Re-passivate the laser tube after a long period without laser operation or when the passivation of the tube has become damaged through contact with the ambient air.

Halogen gases are aggressive substances. To protect the tube and other components, these are designed so that a protective passivation layer is formed when the material comes into contact with a halogen gas.

NOTE
This function can only be performed when the laser is supplied from separate gas cylinders.



CAUTION
Risk of damaging the laser tube!
Do not use this re-passivation procedure when changing the type of gas in a multigas tube (e.g. fluorine to hydrogen chloride or vice-versa). In this case, contact the Lambda Physik Service Center.

Time Required

- 24 hours (recommendation)

A0409LPX

Tools and Materials



CAUTION
Incorrect handling will cause unnecessary downtime!
Only use gas cylinders with a remaining pressure of more than 10 bar (abs.) to ensure that there is an adequate gas supply to perform gas actions. Depending on the configuration of the gas system, pressures of below 20 bar (abs.) may be critical.

- Gases as specified (see Section 4.3 on page 72). Gas cylinders with a remaining pressure of at least 10 bar (abs.)

Preconditions



CAUTION
The laser device is to remain powered up during this procedure!
Ensure that the maintenance area is at all times adequately secured and that no unauthorized persons can access the laser device.
All persons in the maintenance area shall be fully familiar with the applicable safety regulations and requirements

- Laser device switched on and laser ready to operate (no radiation being emitted).
- Gas cylinder valves open and pressure regulators closed

Passivating the Laser Tube

1. Open the valve on the halogen gas cylinder.
2. Set the pressure regulator in the halogen gas line to the required pressure.
   The gas pressures are indicated in Section 4.3. on page 72.
3. Open the valve on the helium gas cylinder.
4. Set the pressure regulator in the helium gas line to the required pressure.
   The gas pressures are indicated in Section 4.3. on page 72.
5. Press <F3>.
6. Press <EXE> to confirm the choice and start the re-passivation procedure.
   The tube is evacuated to 30 mbar and filled with 200 mbar halogen gas and 900 mbar helium.
7. Leave the laser with the passivation fill for at least 8 hours (e.g. overnight) to allow the halogen to displace the oxygen compounds from the surfaces with which it comes into contact.

Finalization

8. Carry out a new fill (see Section 7.5.1).
   The displaced oxygen compounds are removed during evacuation of the tube before the fresh gas is filled.

A0409LPX

7.6 Laser Optics Maintenance

The LPX*Pro* laser optics consist of the cavity windows (front and rear windows) and the external resonator mirrors (output coupler and rear mirror).

Maintenance of the laser optics consists of cleaning and exchange.

Cleaning the optics is necessary

– after a specific number of pulses (dependent on gas mixture / wavelength),

– if the pulse energy is too low,

– if the beam profile is poor.

Exchange of the optics is necessary

– if the optics are damaged (e.g. scratched),

– if the optics are unable to be cleaned (e.g. burned-in deposits),

– after a specific number of optics cleaning operations (dependent on gas mixture / wavelength).

Each of the optics is contained in a dedicated optics mount that first has to be removed from the laser device and disassembled before the optic can be cleaned or exchanged.

NOTE
To maximize uptime, sets of ready-to-use laser optics can be prepared and stored in spare mounts. This enables contaminated or damaged laser optics to be maintained at your convenience while the laser is running.

The tube windows and rear mirror have a coated surface. During cleaning, ensure that the coating is not damaged. When reassembling the optics mounts and installing them in the laser device, ensure that the coated surface points in the correct direction (see Figure 75).

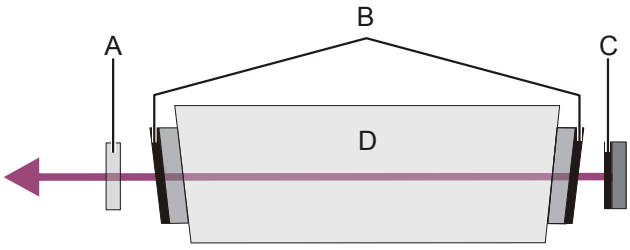

Figure 75: *Optics coatings*

Key to Figure 75

A Output coupler (no coating)
B AR (anti-reflective) coating of tube windows
C HR (highly reflective) rear mirror coating
D Laser tube

A0409LPX

7.6.1 Exchange Premounted Tube Windows

Purpose

Remove the window mounts containing contaminated or damaged optics from the laser device and insert new or clean premounted windows into the laser device.

Prior to removing the window mounts, the gas mixture has to be pumped out of the laser tube and the tube refilled with the gas connected to the inert valve. Following replacement of the optics, a leak test has to be performed. These procedures are controlled through a dedicated software routine.

NOTE
To simplify the exchange of the laser tube optics, the LPX*Pro* is equipped with a SlideValve® at each end of the laser tube. The SlideValves seal the laser tube to prevent ambient room air from entering the tube while removing and inserting the optics (see Figure 76).

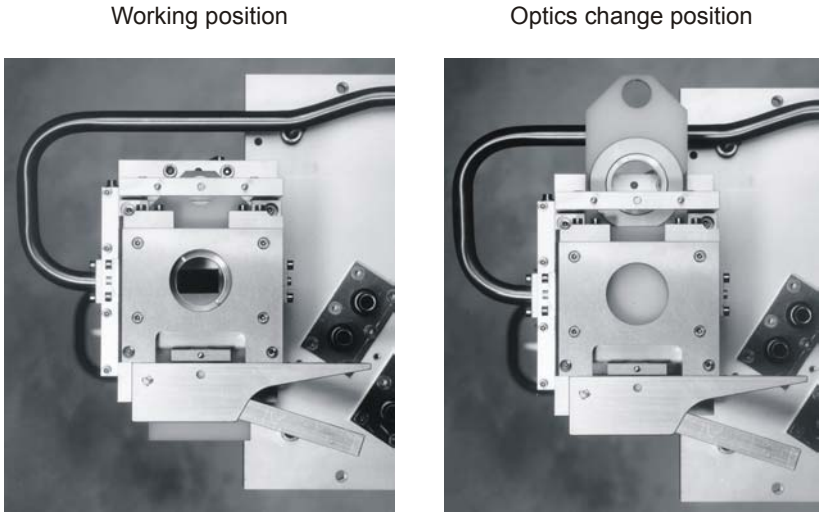

Figure 76: *Operating principle of the SlideValve*

Maintenance Interval

- Remove optics for cleaning:
  - Every 15 to 40 million pulses
  - Every 3 to 5 new gas fills
- Exchange optics:
  - After cleaning the tube windows five times
  - If the optics are damaged or unable to be cleaned

A0409LPX

Time Required

- 1.0 h

Tools and Materials

- Housing key to open the front and rear service panels
- Disposable skin-tight plastic gloves
- Premounted laser tube windows
- Cylinder of inert gas with sufficient remaining pressure

NOTE
During the flushing procedure approx. 500 liters of inert gas at 4 bar (abs.) are required. The pressure in the inert gas cylinder is not to drop below 5 bar (abs.) during the flushing procedure.

- Cylinder of buffer gas with sufficient remaining pressure

NOTE
During the flushing procedure, the laser tube is evacuated to below atmospheric pressure. If a leak is detected while evacuating the tube, an emergency fill with buffer gas is performed.

Preconditions



CAUTION
The laser device is to remain powered up during this procedure!
Ensure that the maintenance area is at all times adequately secured and that no unauthorized persons can access the laser device.
All persons in the maintenance area shall be fully familiar with the applicable safety regulations and requirements

- Laser device switched on and laser ready to operate (no radiation being emitted).

Flushing the Laser Tube



CAUTION
Incorrect operation can damage the pressure regulator!
If pressure is applied to a pressure regulator with low secondary pressure, the pressure regulator membrane may become damaged.
Always ensure that the pressure regulator is closed, before opening the gas cylinder valve.

1. Open the inert gas cylinder valve.
2. Set the pressure regulator in the inert line to 4 bar (abs.).
3. Press <PURGE RESERVOIR>.
4. Press cursor left or cursor right to select “WIN. EXCHANGE”.
5. Press <ENTER> to confirm the choice.

A0409LPX

6. Press <EXE> to proceed.

   The vaccum pump starts to evacuate the tube. After reaching 30 mbar, the vacuum pump stops, the inert gas valve opens and the tube is filled to 1200 mbar with inert gas. The inert gas valve then closes. Following this, the message ”REPLACE WINDOWS (enter)“ appears.

Exchanging the Premounted Tube Windows



CAUTION
Risk of damaging laser tube.
Do not press <ENTER> when the tube windows are removed as this would cause a large amount of ambient air to enter the laser tube.

7. Remove the front and rear service panels (see Section 7.3.2.1 on page 153).

   The SlideValves for the front and rear laser tube optics are now accessible. Figure 77 shows the front Slidevalve and indicates the location of the slide (A) and lever (B) that are to be actuated to exchange the premounted window.

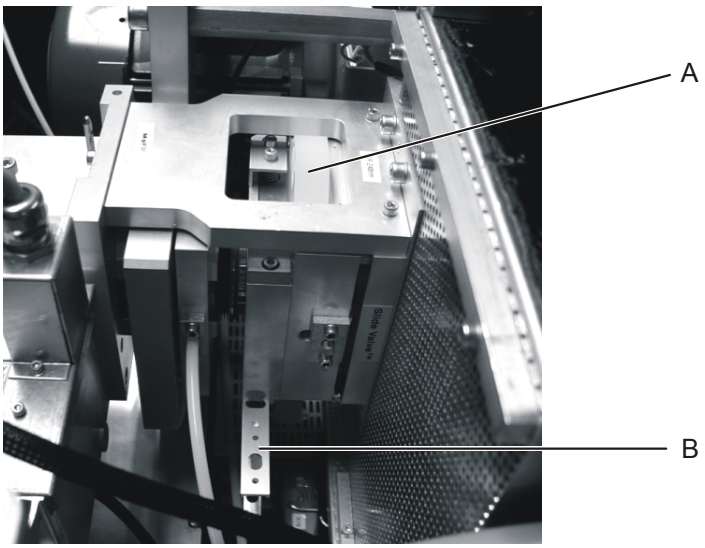

Figure 77: *Front SlideValve*

8. With one hand, squeeze the SlideValve tension lever to release the tension on the front SlideValve.

A0409LPX

9. While squeezing the SlideValve lever, place the index finger of the other hand through the gripping hole in the slide and pull upwards as shown in Figure 80.

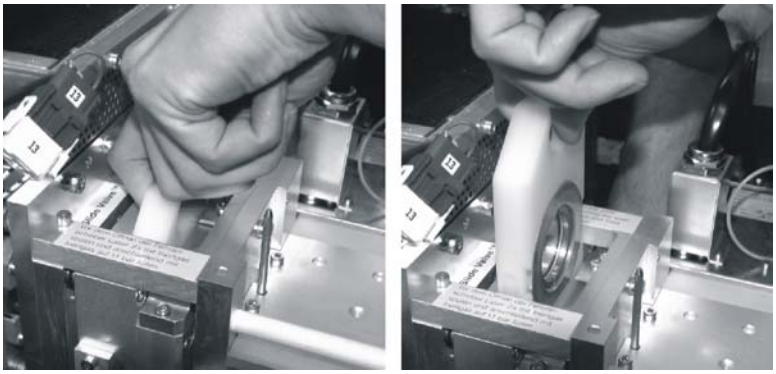

Figure 78: *Opening the SlideValve*

10. Once the slide has been fully extended (see Figure 79), release the tension lever to seal the laser tube.

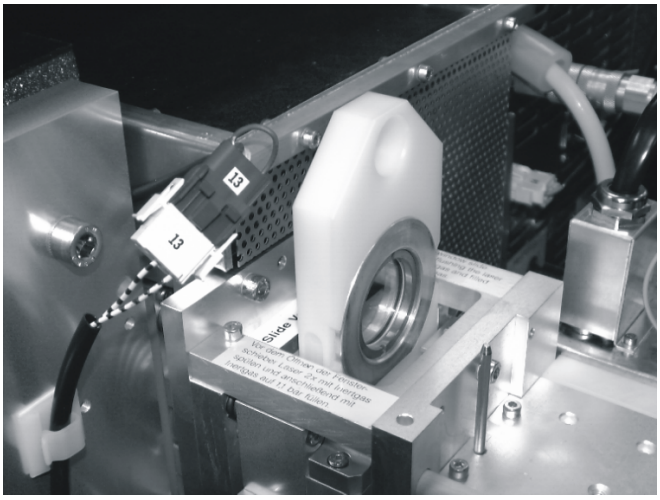

Figure 79: *SlideValve opened*

A0409LPX

CAUTION
Incorrect handling can seriously damage the windows!
Always wear skin-tight plastic gloves when handling the windows.
Avoid touching the surface of the window

11. Carefully grasp the tube window mount and pull it away from the SlideValve as shown in Figure 80.

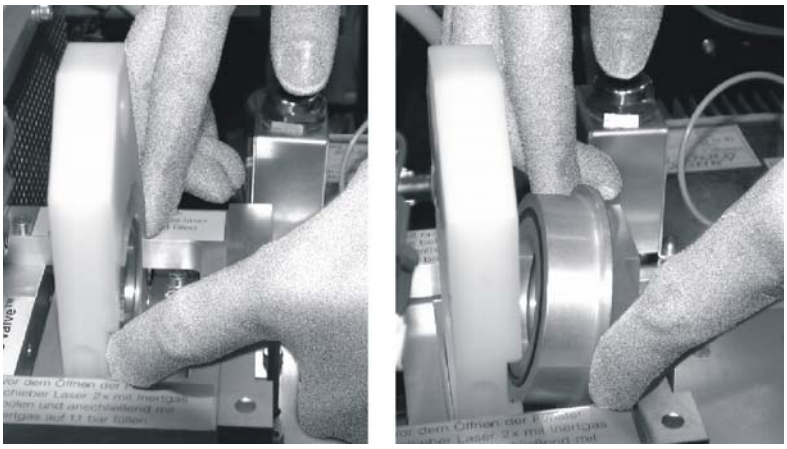

Figure 80: *Removing the tube window mount*

12. Place the removed window mount aside for future optic cleaning or exchange.
13. Take the replacement (clean) premounted window and place it in the SlideValve.

NOTE
Take note of the specific orientation of the window mount. The window mount only fits in one position (see Figure 81).

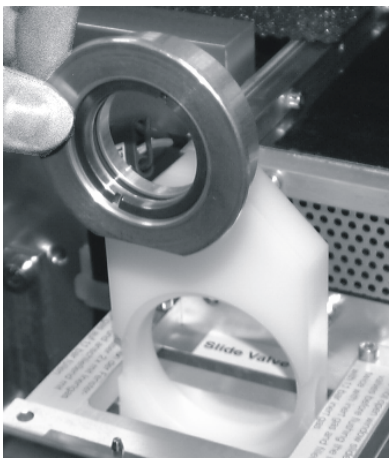

Figure 81: *Inserting the premounted window*

A0409LPX

14. While squeezing the SlideValve tension lever, push the plastic slide fully downward until it is properly seated.

    The optic in its premount is now pressed against the cavity by spring tension; creating a pressure tight seal.
15. Ensure that the SlideValve tension lever has fully returned to its starting position.
16. Repeat steps 8 to 15 to exchange the other window.

Leak Testing the Laser Tube

17. Press <ENTER> to confirm that the optics have been exchanged.

    An automatic leak test is started. The laser is filled to 3000 mbar with inert gas and the cavity pressure is monitored over a 15 minute period. During this time the message „LEAK TEST“ is displayed. A leak is indicated when there is a leak rate of more than 2 mbar per hour. Should a leak be detected, the laser tube is evacuated to approx. 1200 mbar and the warning message „Leak!-Check Windows“ appears. Locate the exact source of the leak and rectify.

NOTE
The most likely reason for a leak is either damage to the window mounts, the two O-ring seals and O-ring grooves or incorrect positioning of the window in the mount.

18. When no leak is detected, press <ENTER> to proceed.

    The laser tube is then evacuated to 30 mbar and filled to 500 mbar twice before being evacuated and finally filled to 1080 mbar.

Finalization

19. Replace the front and rear service panels (see Section 7.3.2.2 on page 154).
20. Perform the new fill procedure (see Section 7.5.1 on page 168).

A0409LPX

7.6.2 Clean / Replace Tube Windows

Purpose

Disassemble the tube window mounts to remove the optics for cleaning or exchange. Clean contaminated windows or exchange damaged or worn windows. Reassemble the window mounts for installation in the laser device.

Tools and Materials

- Optic mount with contaminated lens (see Figure 82, G)
- Optics wrench (special tool in service case) (C)
- Glass plate or similar clean, flat and smooth working surface (E)
- Lint-free, cotton-based lens tissue (F)
- Pressurized air or inert gas that is particulate and oil-free (B)
- Polishing powder (e.g. vienna chalk from service case) (H)
- Distilled water
- Optics grade Ethanol or Methanol (D)
- Disposable skin-tight plastic gloves (A)
- Lead pencil

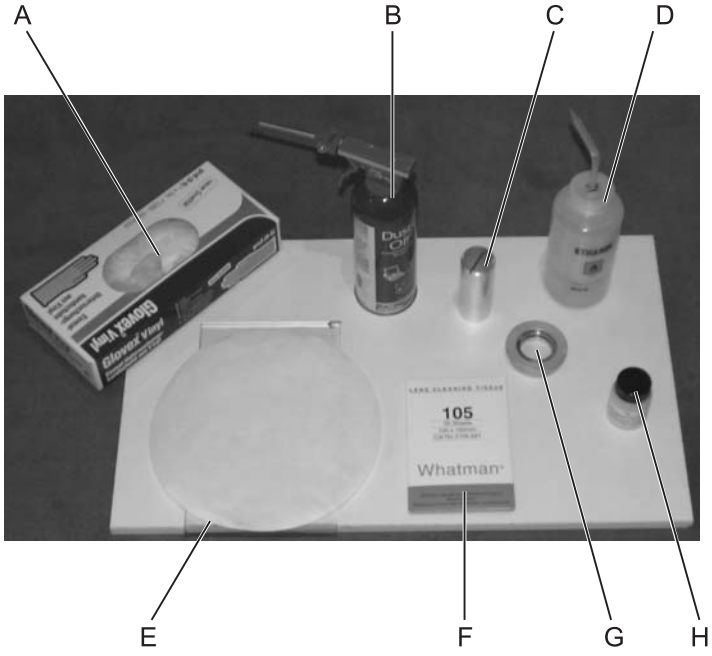

Figure 82: *Optics cleaning materials*

A0409LPX

Maintenance Interval

- See Section 7.6.1 on page 176

Time Required

- 1.0 h

Preconditions

- Window mount with contaminated or damaged optic removed from the laser device (see Section 7.6.1 on page 176).

Preparation



CAUTION
Incorrect handling can seriously damage the laser tube optics!
Always wear skin-tight plastic gloves when handling the laser tube optics. Avoid touching the surfaces of the laser tube optics.

1. Place three layers of lens tissue on a clean, dry and smooth surface (glass plate).

Disassembling the Window Mount

2. Use the optics wrench to unscrew the optic retaining ring (see Figure 83).

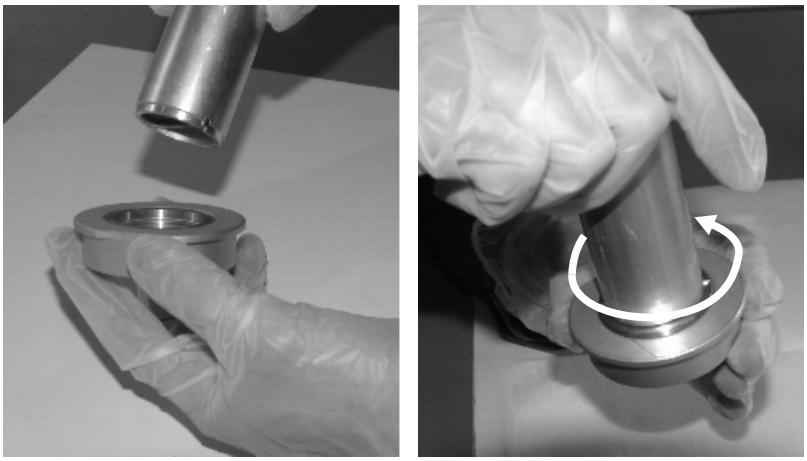

Figure 83: *Unscrewing the optic retaining ring*

A0409LPX

3. Remove the optic retaining ring from the window mount (see Figure 84).



Figure 84: *Removing the optic retaining ring*

4. Use pressurized air or inert gas to blow off any loose particles from both sides of the window.
5. Remove the window with the optic collar from the window mount.

NOTE
The window is most likely stuck to the sealing O-ring. Take a sheet of clean tissue and carefully push the window out of the mount. Some force may be needed.

6. Remove the window from the optic collar (see Figure 85).

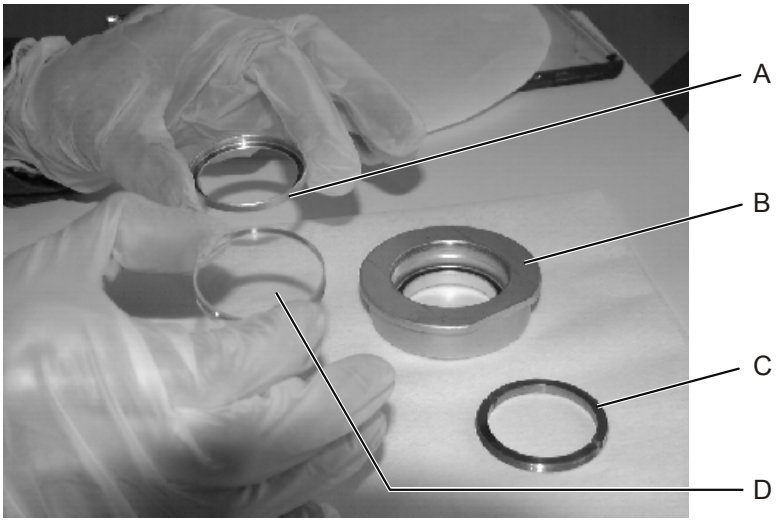

Figure 85: *Removing the optic*

A0409LPX

Key to Figure 85

A	Optic collar	C	Optic retaining ring
B	Window mount	D	Window

7. Check that the window has a mark indicating the coated surface.

NOTE
A) The coated side of the window is usually marked with a horizontal line along the edge that has the coating or an arrow or upside down V pointing towards the coating.
B) To verify for yourself which side of the window has the coating, hold the optic at an angle while looking at reflected light from a fluorescent bulb. The reflected light will have a greenish to pink tint across the entire surface whereas the backside has no tint.

8. Use a pencil to make or enhance the mark indicating the coated surface.
9. Lay the window with the coated side downwards onto the prepared lens tissue.
10. Remove the O-rings from the window mount.
11. Use lens tissue and a solvent to wipe the O-rings until they are clean and free of any debris.
12. Check the O-rings and window mount for damage. Renew the window mount if the O-ring retaining grooves have dents or scratches. Renew the O-rings if there are any indentations or scratches in the O-ring material.

NOTE
A less than perfect O-ring will almost certainly cause a leak. If in doubt, replace the O-ring.

13. Insert the O-rings into the optic mount.

NOTE
When exchanging the window for a new, unused optic (i.e. the window is not to be cleaned), proceed with step 30.

Cleaning the Tube Window

NOTE
Any action performed on an optic can potentially scratch it. Always begin with the simplest cleaning approach and the one least likely to scratch the optic.

14. Place a single sheet of lens cleaning paper over the optic.
15. Put a few drops of ethanol onto the lens tissue close to one edge of the optic.
16. While holding the lens in place, drag the lens tissue across the surface of the optic.

A0409LPX

CAUTION
The coating on the lens can be easily damaged!
Only use ethanol to clean the coated side of the optic. Use gentle pressure when cleaning the coated side of the optic. Never use cleaning powders (e.g. vienna chalk) to clean the coated side of the lens.

17. Turn over the optic and repeat the above procedure to clean the coated side of the optic.
18. If the first cleaning approach did not result in a clean optic, place three fresh sheets of lens cleaning tissue onto a clean, dry and smooth surface (glass plate).
19. Mix two teaspoons of distilled water or ethanol with one teaspoon of vienna chalk on the uppermost tissue.
20. Holding the lens between your index finger and thumb, place the uncoated side of the optic onto the vienna chalk slurry.

CAUTION
The surface of the optic is easily scratched!
Excessive downward pressure can scratch the optical surface. Let the weight of the optic apply the downward force.

21. While applying a sideways pressure, move the optic in a circular or figure-eight fashion (see Figure 86).



Figure 86: *Cleaning the uncoated side of the window*

22. Rinse the lens, e.g. under flowing distilled water.
23. Place three layers of fresh lens tissue on a clean, dry and smooth surface (glass plate).
24. Lay the window with the coated side downwards onto the prepared lens tissue.
25. Place a single sheet of lens cleaning paper over the window.
26. Put a few drops of ethanol onto the lens tissue close to one edge of the window.

A0409LPX

27. While holding the lens in place, drag the lens tissue across the surface of the window.
28. Repeat the previous three steps until the lens is clean and dry.
29. Visually inspect the window (in a well-lit area) to ensure that it is clean and dry.

Reassembling the Window Mount

30. Carefully insert the window into the optic collar and then into the window mount. The uncoated side of the window has to point toward the O-ring in the mount (see Figure 87).

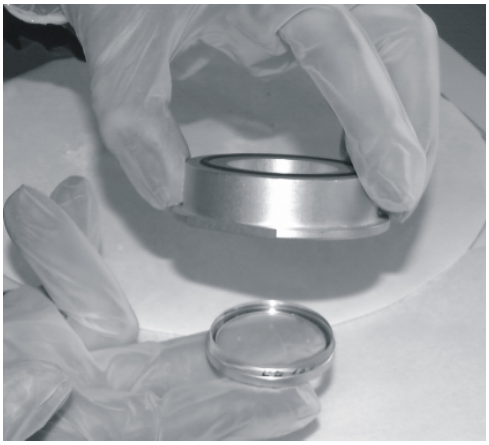

Figure 87: *Inserting the window*

31. Insert the optic retaining ring into the window mount and tighten using the optic wrench (turn clockwise).
32. Store the premounted window in a thoroughly clean and dry place.

7.6.3 Exchange Premounted Mirrors

Purpose

Exchange the premounted mirrors in the external resonator of the LPX*Pro* laser device.

Tools and Materials

- Housing key
- 4 mm allen key
- Long 3 mm allen key
- Angled 3 mm allen key
- 2 replacement mirror mounts (recommended)

A0409LPX

Maintenance Interval

- Every 50 to 100 million pulses

Time Required

- 1.0 h

Preparation

1. Switch off and lock out the laser device (see Section 7.3.1 on page 149).
2. Remove the front and rear service panels (see Section 7.3.2.1 on page 153).

Removing the Front Mirror (Output Coupler)

3. If closed, open the mechanical beam shutter.
4. Unscrew and remove the beam guidance tube.
5. Use the 4 mm allen key to loosen the screw securing the energy monitor (see Figure 88, A).

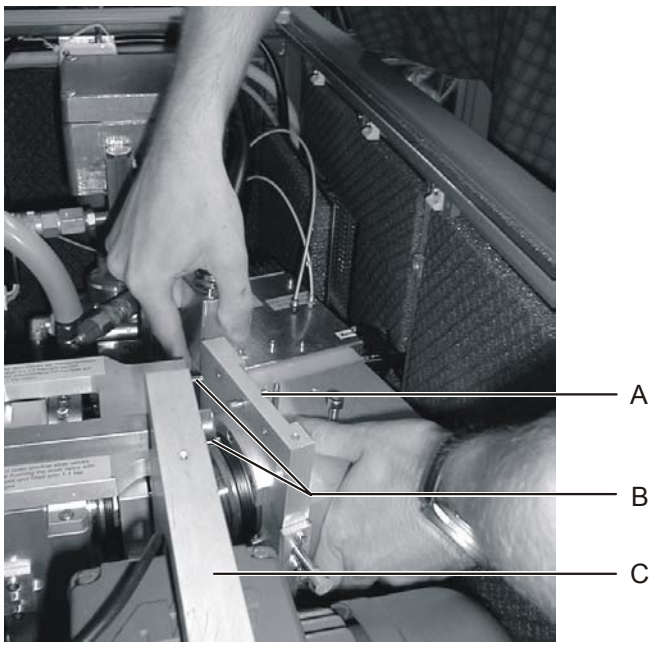

Figure 88: *Removing the energy monitor*

6. Lift the energy monitor off of the locating pins (B) on the external resonator holder (C) and set it down in a safe place, e.g. onto the top plate of the oil cooler.

A0409LPX

7. Use the long 3 mm allen key to loosen the three screws securing the external mirror mount (see Figure 89).

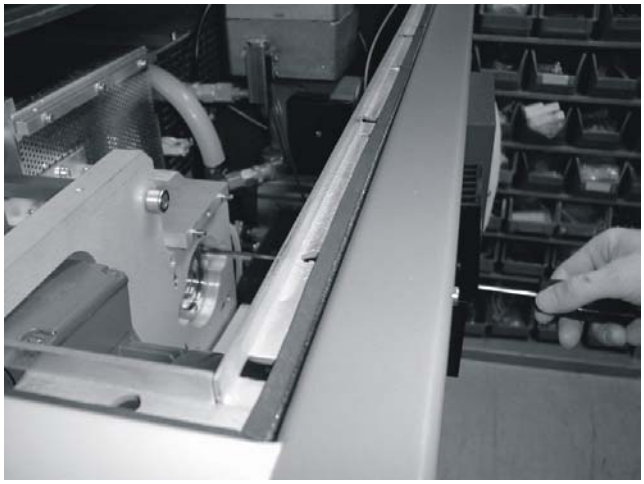

Figure 89: *Loosening the front mirror mount fastening screws*

8. Pull the mirror mount away from the locating pins (see Figure 90).

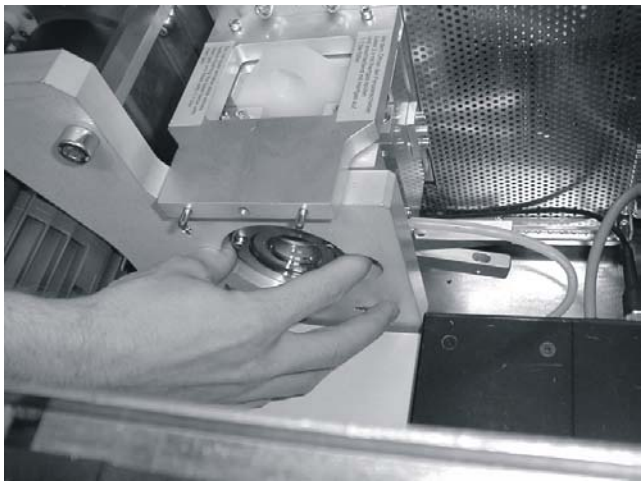

Figure 90: *Exchanging the front mirror mount*

Inserting the Front Mirror (Output Coupler)

9. Insert the replacement mirror mount into the external resonator holder. The mirror mount is guided by locating pins.
10. Use the long 3 mm allen key to secure the mirror mount to the external resonator holder.
11. Attach the energy monitor to the external resonator holder.
12. Use the 4 mm allen key to fix the energy monitor.
13. Reattach the beam guidance tube.
14. Close and secure the front service panel (see Section 7.3.2.1 on page 153).

A0409LPX

Removing the Rear Mirror (HR Mirror)

15. Remove the rear service panel (see Section 7.3.2.1 on page 153).
16. Unscrew and remove the beam dump.
17. Use the angled 3 mm allen key to loosen the three screws that secure the external mirror mount (see Figure 91).

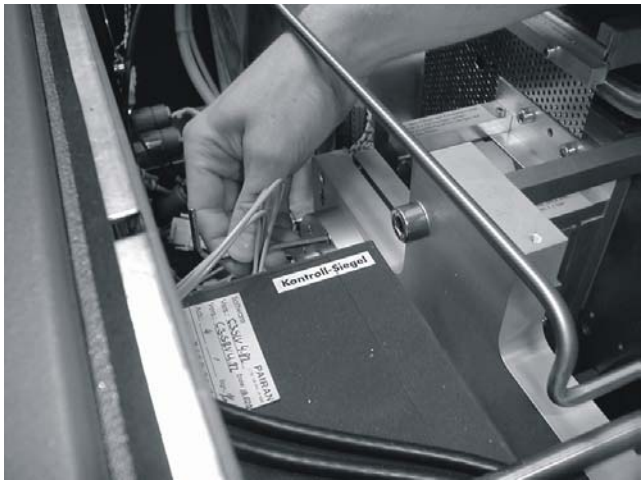

Figure 91: *Loosening the rear mirror mount fastening screws*

18. Pull the mirror mount from the locating pins.

Inserting the Rear Mirror (HR Mirror)

19. Insert the replacement mirror mount into the external resonator holder. The mirror mount is guided by the locating pins.
20. Use the angled 3 mm allen key to fix the mirror mount to the external resonator holder.



WARNING
Risk of exposure to laser radiation!
Laser radiation will be present at the rear of the laser device if the laser is operated without the beam dump and with an open rear shutter. Do not operate the laser without beam dump!

21. Re-attach the beam dump.
22. Close and secure the rear service panel (see Section 7.3.2.1 on page 153).

A0409LPX

7.6.4 Exchange Mirrors

Purpose

Disassemble the external resonator optic mounts to exchange damaged or worn mirrors and reassemble the resonator optic mounts for installation in the laser device.

Tools and Materials

- 2 mm allen key
- Optic mount with contaminated optic
- Glass plate or similar clean, flat and smooth surface for working on
- Lint-free, cotton-based lens tissue
- Pressurized air or inert gas that is particulate and oil-free
- Polishing powder (e.g. vienna chalk from service case)
- Distilled water
- Optics grade Ethanol or Methanol
- Disposable skin-tight plastic gloves
- Lead pencil

Maintenance Interval

- See Section 7.6.3 on page 187

Time Required

- 1.0 h

Preconditions

- Mirror mount with contaminated or damaged optic removed from the laser device (see Section 7.6.3 on page 187).

Preparation



CAUTION
Incorrect handling can seriously damage the external resonator optics! Always wear skin-tight plastic gloves when handling the optics. Avoid touching the surfaces of the optics.

1. Place three layers of lens tissue on a clean, dry and smooth surface (glass plate).

A0409LPX

Disassembling the Mirror Mount

2. Use the 2 mm allen key to remove the screws and the washers from the mirror mount (see Figure 92).

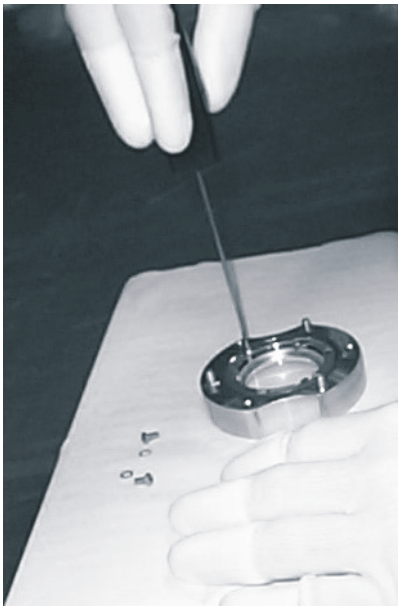

Figure 92: *Removing the screws from the optic mount*

3. Remove the copper spring (see Figure 93, C) from the mirror mount (A).

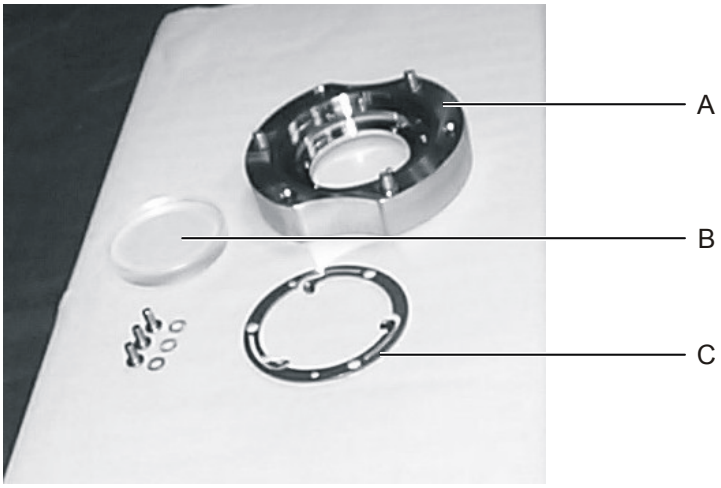

Figure 93: *Removing the mirror from the optic mount*

4. Use a piece of lens tissue to remove the contaminated mirror (see Figure 93, B) from the mirror mount (A).

A0409LPX

Reassembling the Mirror Mount

5. Carefully insert the cleaned optic into the mirror mount. The coated side of the optic has to point upwards.
6. Use the 2 mm allen key to fix the copper spring to the optic mount.
7. Insert the front and rear optic mounts with the cleaned optics into the laser device (see Section 7.6.3).

7.7 Energy Monitor Maintenance

Maintenance of the energy monitor consists of calibrating the energy monitor and cleaning or exchanging the beam splitter.

7.7.1 Calibrate Energy Monitor

Purpose

Calibrate the internal energy monitor in accordance with an external power or energy meter. Calibration is performed with the help of a dedicated software option which starts the laser and enables input of a reference power value.

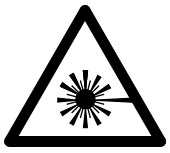

WARNING
Risk of injury through laser radiation!
This procedure requires working with an open laser. When laser operation is started, laser radiation will be emitted from the beam output aperture. Always wear protective eyewear and strictly adhere to the safety precautions detailed in Section 3.2.2.

Tools and Materials

- Suitable energy meter or power meter (see Site Preparation for more information)
- Protective eyeware suitable for the currently active laser wavelength
- Pencil and paper

Maintenance Interval

- Whenever the tube windows have been cleaned / exchanged

Time Required

- 0.25 h

A0409LPX

Preparation

1. Clean or exchange the beam splitter (see Section 7.7.2 on page 195).
2. Switch on the laser device.
3. Perform a new gas fill (see Section 7.5.1 on page 168).
4. Press <REPRATE>.
5. Set the repetition rate so that it is suitable for the energy or power meter that you are using and press <ENTER> to confirm input.

NOTE
To obtain the best results, set the repetition rate to the rate that you normally work with.

6. Press <HV>.
7. Set the high voltage to the highest level possible for the selected repetition rate and press <ENTER> to confirm input.
8. Place the energy or power meter at the output aperture of the laser device.
9. Open the beam shutter.

Calibrating the Energy Monitor

10. Press <EGY CAL>.
11. Press <EXE> to confirm that the procedure is to be started.

    “WAIT...“ is displayed in the second line for a short period. The laser starts firing with the choosen repetition rate and HV.
12. Observe the displayed values. They must be within a range of 99-200.

    The laser now tries to adjust the energy monitor gain so that the (AD converter) reading is within the range of 99-200. If the reading is out of range, take note of whether it is too high or too low.

    Should none of the gain settings provide an acceptable reading, the number of attentuators has to be varied or the iris in front of the photodiode has to be readjusted. Call Lambda Physik service.

    When the adjustment has succeeded, the display changes to “READING=“.

NOTE
Input values must be in mJ (1/1000 Joule). If you are using an external power meter, obtain the input value with the following equation:

$$E_{input} = \frac{P_{ext}}{1000 \cdot f}$$

where E_{input} is the input value [E_{input}] = mJ, P_{ext} is the reading from the external power meter [P_{ext}] = W and f is the repetition rate [f] = Hz.

13. Enter the external energy measurement data in mJ.

A0409LPX

14. Press <ENTER> to confirm input.

    The laser device sets the external energy measuring data equal to the internally calculated value. The energy monitor is now calibrated.
15. Measure a few laser pulses with the external energy meter and compare these values with those displayed by the energy monitor values. They should differ no more than 2-3 %.

7.7.2 Remove / Insert Beam Splitter

Purpose

Remove a contaminated beam splitter to enable cleaning or exchange a damaged or worn beam splitter.

Tools and Materials

- Housing key to open the front service panel
- 2 mm allen key
- 2.5 mm allen key
- 3 mm allen key

Maintenance Interval

- Clean beam splitter:
  - With every energy monitor calibration
- Exchange beam splitter:
  - After cleaning the beam splitter five times

Time Required

- 1.0 h

Preparation

1. Switch off and lock out the laser device (see Section 7.3.1 on page 149).
2. Remove the front service panel (see Section 7.3.2.1 on page 153).

A0409LPX

Removing the Beam Splitter

CAUTION
Incorrect handling can seriously damage the beam splitter optics!
Always wear skin-tight plastic gloves when handling optics. Avoid touching optical surfaces.

3. Use the 3 mm allen key to remove the screws securing the the top plate of the beam splitter unit (see Figure 94, A).

NOTE
The beam splitter and reflector optics are attached to the top plate of the beam splitter unit.

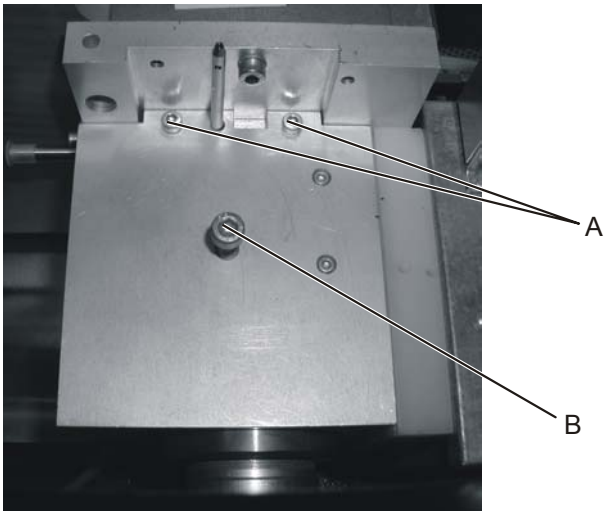

Figure 94: *Removing top plate of beam splitter unit*

CAUTION
Careless handling can destroy the optics!
When removing the top plate of the beam splitter unit, ensure that beam splitter and reflector optics do not touch any other objects.

4. Use the grip (see Figure 94, B) to lift the top plate of the beam splitter unit. Carefully place the top plate down so that the optics point upwards.

A0409LPX

5. Use the 2.5 mm allen key to loosen the screws (see Figure 95, B) clamping the beam splitter optic (A).

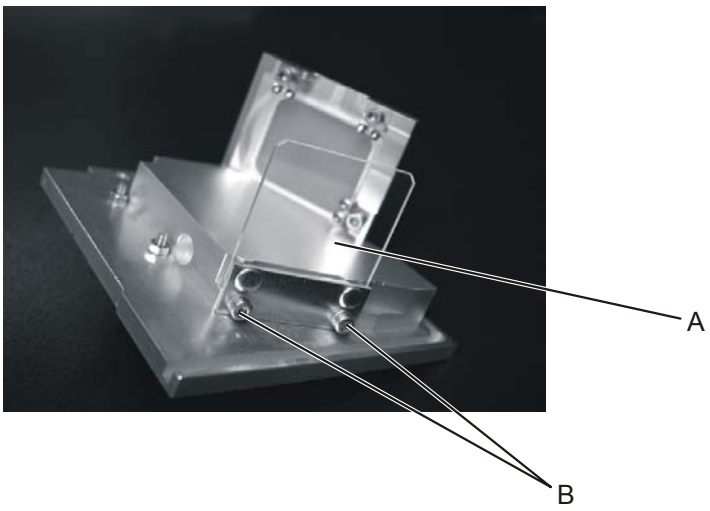

Figure 95: *Top plate of beam splitter unit*

6. Remove the beam splitter optic and lay aside for cleaning or renewal.

Inserting the Beam Splitter



CAUTION
Incorrect handling can seriously damage the beam splitter optics! Always wear skin-tight plastic gloves when handling optics. Avoid touching optical surfaces.

7. Visually inspect the optic (in a well-lit area) to ensure that it is undamaged, clean and dry.
8. Carefully insert the cleaned beam splitter optic.
9. Use a 2.5 mm allen key to tighten the clamping screws.

A0409LPX

CAUTION
Careless handling can destroy the optics!
When inserting the top plate of the beam splitter unit, ensure that beam splitter and reflector optics do not touch any other object.

10. Taking hold of the grip provided, turn over the top plate so that the optics point downwards and insert into the beam splitter housing. Ensure that the guide rod passes through the correct locating hole (see Figure 96).

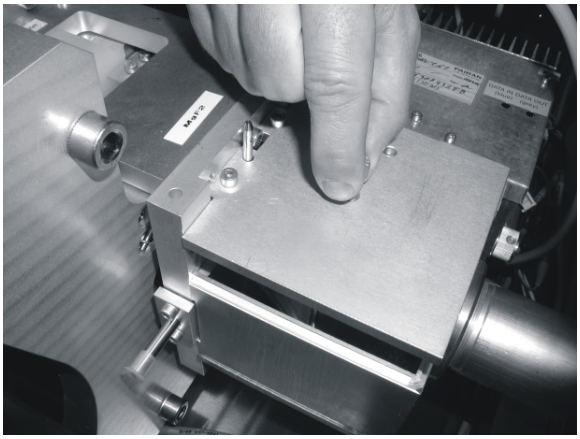

Figure 96: *Inserting the beam splitter top plate*

11. Insert the mounting screws (see Figure 96, C) and tighten with a 3 mm allen key.
12. Use the housing key to close and tighten the front service panel.

A0409LPX

7.7.3 Cleaning the Beam Splitter

Purpose

Clean the beam splitter optic in the energy monitor.

Tools and Materials

- Housing key to open the front and rear service panels
- 2 mm allen key
- 2.5 mm allen key
- 3 mm allen key
- Glass plate or similar clean, flat and smooth surface for working on
- Lint-free, cotton-based lens tissue
- Pressurized air or inert gas that is particulate and oil-free
- Polishing powder (e.g. vienna chalk from service case)
- Distilled water
- Optics grade Ethanol or Methanol
- Skin-tight plastic gloves

Maintenance Interval

- See Section 7.7.2 on page 195

Time Required

- 0.5 h

Preconditions

- Contaminated beam splitter optic removed from the laser device (see Section 7.7.2 on page 195).

Preparation



CAUTION
Incorrect handling can seriously damage the beam splitter optic! Always wear skin-tight plastic gloves when handling optics. Avoid touching optical surfaces.

1. Place three layers of lens tissue on a clean, dry and smooth surface (glass plate).
2. Using pressurized air or inert gas, blow off any loose particles from both sides of the optic.
3. Lay the optic onto the prepared lens tissue.

A0409LPX

Cleaning the Beam Splitter

NOTE
Any action performed on an optic can potentially scratch it. Always begin with the simplest cleaning approach and the one least likely to scratch the optic.

1. Place a single sheet of lens cleaning paper over the beam splitter optic.
2. Put a few drops of ethanol onto the lens tissue close to one edge of the optic.
3. While holding the optic in place, drag the lens tissue across the surface of the optic.
4. Turn over the optic and repeat the above procedure.
5. If the first cleaning approach did not result in a clean optic, place three fresh sheets of lens cleaning tissue onto a clean, dry and smooth surface (glass plate).
6. Mix 2 teaspoons of distilled water with one teaspoon of vienna chalk on the uppermost tissue.
7. Holding the optic between your index finger and thumb, place the optic onto the vienna chalk slurry.



CAUTION
The surface of the optic is easily scratched!
Excessive downward pressure can scratch the optical surface. Let the weight of the optic apply the downward force.

8. While applying a sideways pressure, move the optic in a circular fashion.

NOTE
Excessive downward pressure can scratch the optical surface. Let the weight of the optic apply the downward force.

9. Rinse the optic under flowing distilled water.
10. Place three layers of fresh lens tissue on a clean, dry and smooth surface (glass plate).
11. Lay the optic onto the prepared lens tissue.
12. Place a single sheet of lens cleaning paper over the optic.
13. Put a few drops of ethanol onto the lens tissue close to one edge of the optic.
14. While holding the optic in place, drag the lens tissue across the surface of the optic.
15. Repeat the steps 12 to 14 until the optic is clean and dry.
16. Visually inspect the optic (in a well-lit area) to ensure that it is clean and dry.
17. Insert the cleaned beam splitter optic as described in Section 7.7.2.

A0409LPX

7.8 Laser Resonator Alignment

Purpose

Use a visible HeNe or diode alignment laser to align the rear mirror and output coupler so that they are parallel to each other and at right-angles to the laser beam. This is necessary to ensure even energy distribution and a good beam profile.

Prior to aligning the optics, the visible alignment laser has to be adjusted to pass through the exact center of the laser resonator.

NOTE
A) This procedure only applies when a dielectric coated HR rear mirror is inserted. Aluminum coated mirrors will not transmit the visible light of the alignment laser.
B) Lambda Physik offers a diode adjustment laser dedicated to the LPX*Pro*. This remains permanently fitted to the laser device and saves adjustment of the alignment laser before each laser alignment procedure. For further information, please call Lambda Physik.

Alternative Methods

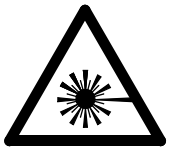

WARNING
Risk of injury through laser radiation!
Laser resonator alignment procedures that require working with an open laser beam are only to be performed by authorized persons that have received specific instruction at a Lambda Physik training course.

In addition to resonator alignment using a visible alignment laser as described in this section, there are other methods of aligning the resonator and optimizing energy distribution and beam profile, e.g. aligning the resonator by optimizing the power output of the laser.

Alternative methods of laser alignment usually require working with an open laser beam. These methods shall only be performed by persons that are authorized and have received specific training at a dedicated Lambda Physik training course. Please contact Lambda Physik for further information.

A0409LPX

Tools and Materials

- Class 2 diode or HeNe (visible) alignment laser

NOTE
Class 2 lasers have a maximum power output of 1 mW. HeNe lasers operate at a wavelength of 632.8 nm (visible red). The wavelength of a diode laser is version dependent. For further information, please refer to the manufacturer's instructions.

- Alignment pucks (from service case)
- Piece of card, on which points of light can easily be seen, with 2 mm pin hole
- Housing key to open the front and rear service panels
- 4 mm allen key
- Long 3 mm allen key

Maintenance Interval

- Whenever the tube windows have been cleaned / exchanged

Time Required

- 1.0 h

Preconditions

- Laser device switched off and locked out (see Section 7.3.1 on page 149).
- Front and rear service panels removed (see Section 7.3.2.1 on page 153).
- Front and rear beam shutters open
- Energy monitor and beam guidance tube removed (see "Removing the Front Mirror (Output Coupler)", steps 4 to 6 on page 188).
- Beam dump removed (see "Removing the Rear Mirror (HR Mirror)", step 16 on page 190).

A0409LPX

Setting Up the Visible Alignment Laser

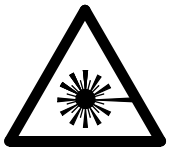

CAUTION
Risk of eye injury!
Do not stare into the beam of a class 2 laser.
Remove all jewelry while performing the alignment procedure.
Never look directly at reflected beams.

1. Direct the visible aligment laser from the rear through the center of the laser cavity (see Figure 97).

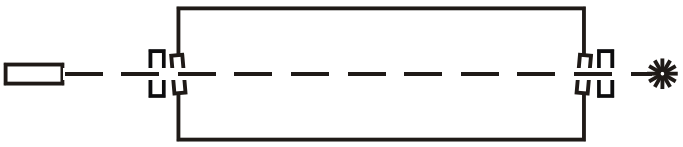

Figure 97: *Direct alignment laser through laser cavity*

NOTE
The electrodes in an excimer laser are very smooth and can easily reflect the light of the alignment laser. It is, therefore, possible to align the laser such that it appears to be on axis when, in fact, it is being reflected off an electrode. This is easily determined by observing the direction in which the alignment laser light moves as you adjust the alignment laser mirror. If you adjust the mirror to move the light to the right, the light at the output side should move to the right. If you make an adjustment to the right and the beam moves to the left, this indicates that the alignment laser beam is being reflected off an electrode.

2. When the alignment laser is roughly on axis with the laser resonator, locate the two plastic alignment pucks into the aperture of each mirror mount.

NOTE
The mirror can remain installed during this procedure.

3. Adjust the alignment laser until the beam exactly passes through both holes in the alignment pucks (see Figure 98).

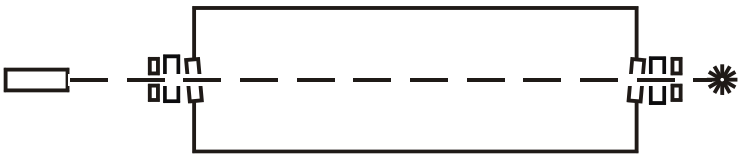

Figure 98: *Direct alignment laser through alignment pucks*

4. Remove the alignment pucks.

A0409LPX

Aligning the Laser Resonator

5. Place the piece of card as close as possible to alignment laser.
6. Position the card so that the beam cleanly passes through the pin hole.

NOTE
Each resonator optic will reflect a small percentage of the alignment laser beam back towards the alignment laser. Depending on the size of the card and initial adjustment of the optics, these two light spots may already be visible on the card (see Figure 99).

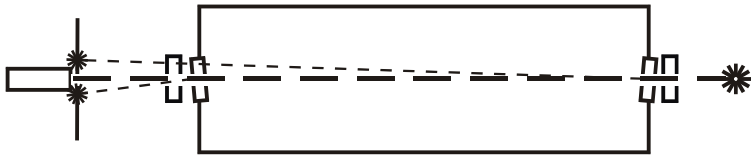

Figure 99: *Reflection of alignment laser on card (alignment necessary)*

7. Use the long 3 mm allen key to adjust the horizontal and vertical adjustment at the output coupler until the reflected light is concentric with the alignment laser beam at the pin hole.
8. Using the long 3 mm allen key, adjust the horizontal and vertical adjustment at the HR rear mirror until the reflected light is concentric with the alignment laser beam and reflected light from the output coupler at the pin hole (see Figure 100).

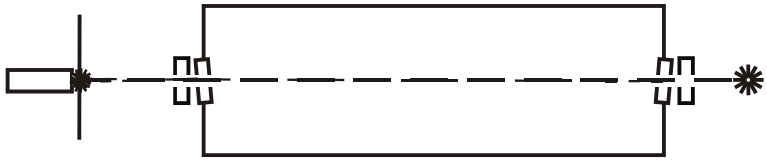

Figure 100: *Reflection of alignment laser on card (optics aligned)*

NOTE
The reflection from the output coupler is dimmer and larger in diameter.

Finalization



WARNING
Risk of unwanted laser radiation!
During laser operation, a certain amount of laser radiation will be present at the rear side of the laser device if the beam dump is not installed and the rear shutter is open.
Do not operate the laser without beam dump!

9. Re-attach the beam dump.

A0409LPX

10. Remount the energy monitor and beam guidance tube (see “Inserting the Front Mirror (Output Coupler)”, steps 11 to 13 on page 189.
11. Close and secure the front and rear service panels (see Section 7.3.2.1 on page 153).

7.9 Thyratron Maintenance

Purpose

Check and, if necessary, increase the thyratron supply voltage to compensate for ageing of the thyratron.

NOTE
The procedure described in this section primarily applies to a routine maintenance action. The same procedure can be followed to rectify faults such as missing pulses, no trigger or low beam energy. Take into account the deviations in the procedure when rectifying faults such as additional pulses and overload.

Maintenance Interval

- Every 300 million pulses

Time Required

- Approx. 0.25 h

Tools and Materials

- 3 mm allen key
- TRMS Voltmeter (TRMS=True Root Mean Square)
- Laser logbook

Preconditions

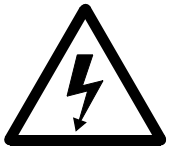

CAUTION
The laser device is to remain powered up during this procedure! Ensure that the maintenance area is at all times adequately secured and that no unauthorized persons can access the laser device.
All persons in the maintenance area shall be fully familiar with the applicable safety regulations and requirements.

- Laser device switched on and laser ready to operate (no radiation being emitted).

A0409LPX

Preparation

1. Remove the right side cover (see Section 7.3.2.2 on page 154).
2. Use the 3 mm allen key to remove the thyratron adjustment plate cover.

NOTE
If one of the jumpers is already at the maximum setting on the thyratron adjusment plate, the thyratron or hydrogen reservoir is exhausted. In this case, contact Lambda Physik service.

Measure the Heating Voltages (U_H and U_R)

NOTE
The specified range for the heating voltage is 6.3 to 6.7 V. If the voltage is considerably outside of this range, the supply voltage will need to be increased or decreased. Ageing of the thyratron causes a decrease in the heating voltage which is compensated for by increasing the supply voltage.

3. Use the TRMS voltmeter to measure the heating voltage of the thyratron (U_H) between the jacks GND and HEAT (see Figure 101).

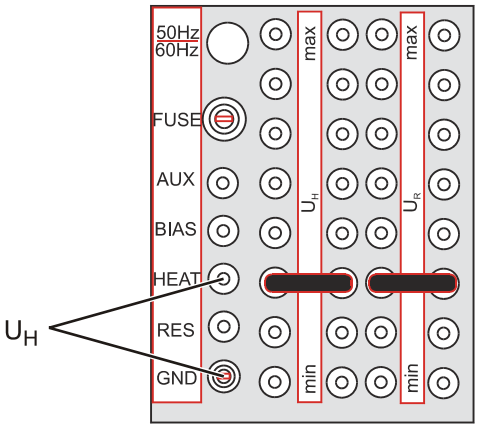

Figure 101: *Measuring thyratron heating voltage*

4. Note the measured value.

A0409LPX

5. Measure the heating voltage of the hydrogen reservoir (U_R) between the jacks GND und RES (see Figure 102).

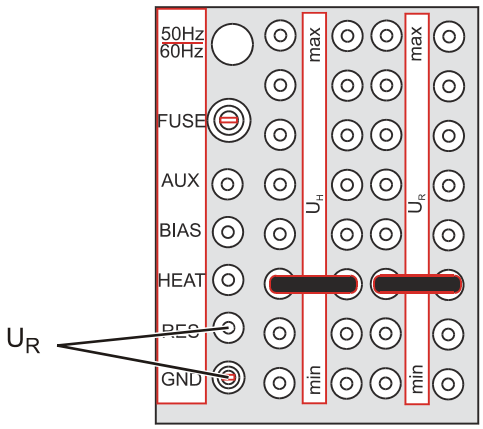

Figure 102: *Measuring reservoir heating voltage*

6. Note the measured value.

Measure the Bias (U_{BIAS})

NOTE
Note that U_{BIAS} is a DC value. The voltage has to be between -150 V and -160 V. If this is not the case, the varistor is exhausted. In this case, contact Lambda Physik service.

7. Measure U_{BIAS} between the jacks GND and BIAS.
8. Note the measured value.
9. Measure U_{BIAS} between the jacks GND und AUX.
10. Note the measured value and, if necessary, contact Lambda Physik service.

Increase the Supply Voltage

NOTE
Steps 12 to 16 only apply to routine maintenance or the rectification of faults such as missing pulses, no trigger or low beam energy. To rectify additional pulses or if the error message OVERLOAD occurs, perform steps 17 to 24.

A0409LPX

11. Remove the U_H and/or U_R jumpers and insert at the next highest setting (see Figure 103).

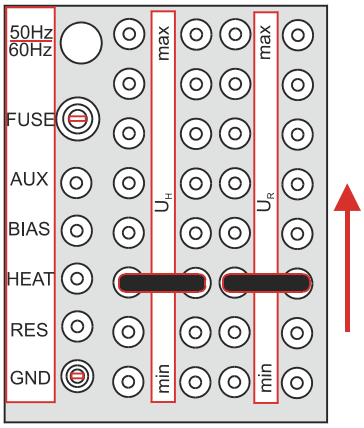

Figure 103: *Thyratron supply voltage adjustment*

12. Start the laser.
13. Wait at least three minutes for the thyratron to reach a thermally stable state. If additional pulses should occur, decrease UR one step.
14. Measure U_H between GND and HEAT again.
15. Measure U_R between GND and RES again.
16. Note the new values and compare them with the previously recorded values.

Decrease the Supply Voltage

NOTE
Steps 17 to 24 only apply if faults such as additional pulses or the error message OVERLOAD occurs.

17. Remove the U_R jumper and insert at the next lowest setting (opposite the direction to the arrow, see Figure 103 on page 208).
18. Start the laser.
19. Wait at least three minutes for the thyratron to reach a thermally stable state.
20. Measure U_R between GROUND and RES again.
21. Note the new value.
22. Start laser operation at the lowest possible HV value for stable energy output.
23. Operate the laser for five minutes at max. repetition rate.
24. Increase the HV value in steps of 1 kV every five minutes until the max. HV value is reached and operate the laser at max. HV for 15 minutes.

    If no additional pulses occur, the thyratron is adjusted. Otherwise, return to step 17 and repeat the procedure.

A0409LPX

Finalization

25. Use the 3 mm allen key to refit the thyratron adjustment plate cover.
26. Refit the right side panel (see Section 7.3.2.2 on page 154)

7.10 Halogen Filter Maintenance

Lambda Physik excimer lasers use a halogen filter to remove molecular species of fluorine from laser gas mixtures removed from the laser tube.

Storage

Filters must be stored in unopened packaging in accordance with all relevant regulations. According to the accident prevention regulation “Protection from Hazardous Chemical Substances (VBG 1a, FR Germany)”, unopened filters can be stored for a period of up to four years. The filter’s lifetime is printed on the packaging. Filters should always be stored in a dry place in the original, unopened packaging, to protect from damage. A Filter with visible damage (e.g. dents) must be removed regardless of its shelf life.

7.10.1 Check Halogen Filter Filling Ratio

Purpose

Check the filling level of the halogen filter. At a filling level of 100 % the halogen filter has to be exchanged (see Section 7.10.2).

Maintenance Interval

- Every 4 weeks
- Before a new gas fill

Time Required

- Approx. 0.05 h

Tools and Materials

- None

Preconditions

- Laser device switched on and laser ready to operate (no radiation being emitted).

A0409LPX

Checking the Halogen Filter Filling Ratio

1. Press <F4> on the handheld keypad.
2. Read off the filling ratio.
3. Press <BREAK> to terminate the function.

NOTE
Make sure that a replacement halogen filter is available in good time.

7.10.2 Exchange Halogen Filter Cartridge

Purpose

Exchange the halogen filter cartridge when the filling capacity has been reached.

Maintenance Interval

- When indicated by the laser control software

Time Required

- Approx. 0.25 h

Tools and Materials

- Housing key
- Pliers
- Replacement halogen filter



WARNING
Toxic hazard!
The halogen filter contains fluorine and/or chloride components.
Keep the filter in a well ventilated place.
Wear safety glasses and gloves.

- Sealable plastic bag
- Plastic gloves
- Safety glasses

Preconditions

- Laser device switched on and laser ready to operate (no radiation being emitted).

A0409LPX

Preparation



CAUTION
Toxic hazard!
The vacuum line may contain halogen. To ensure that there is no halogen in the line, always purge the line before removing the halogen filter.

1. Use the ”PURGE INERT LINE“ procedure to purge the inert gas line and vacuum line (see Section 7.4.2 on page 156).

   The vacuum pump will extract the inert gas through the vacuum line and halogen filter.
2. Shut down and secure the laser device (see Section 6.2.6 on page 133).
3. Remove the rear service panel (see Section 7.3.2.1 on page 153) to gain access to the halogen filter (see Figure 104).

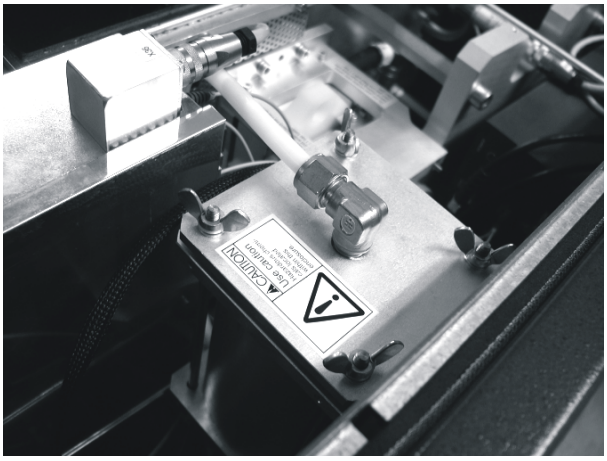

Figure 104: *Location of halogen filter below rear service panel*

Removing the Halogen Filter Cartridge

4. Remove the four wing nuts (see Figure 105, A) and washers (B) from the top of the halogen filter housing .
5. Lift the top cover off of the filter housing (C).
6. Remove the spring (E).
7. Use the pliers to lift out the filter cartridge (F).
   Take care not to remove the bottom o-ring (H).
8. Check the condition of the upper and lower o-rings in the filter housing. Replace the o-rings if damaged.

A0409LPX

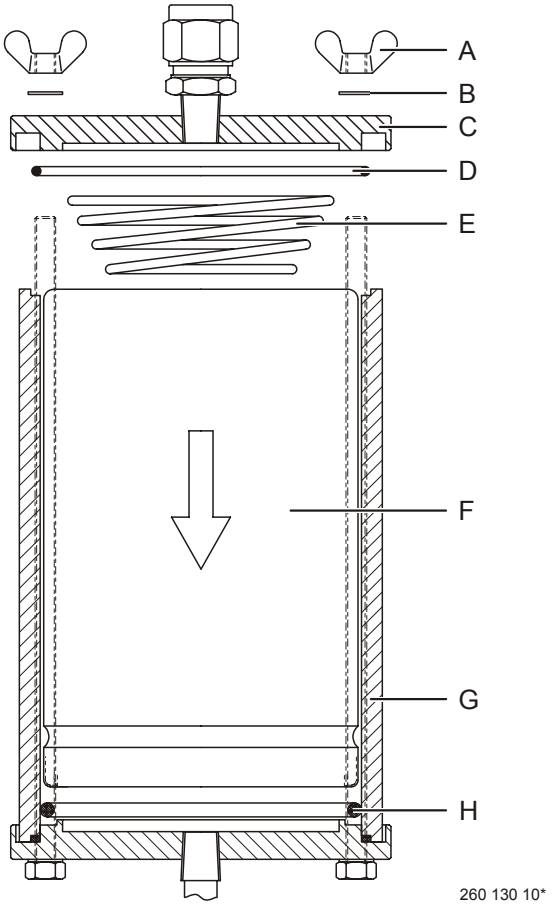

Figure 105: *Exchanging the halogen filter*

Key to Figure 105:

A	Wing nut	E	Spring
B	Washer	F	Filter cartridge
C	Housing cover	G	Housing
D	Top O-ring	H	Lower O-ring

NOTE
The arrow in Figure 105 indicates the direction of flow of the gas.

Inserting the New Halogen Filter

9. Place the new filter cartridge (F) into the filter housing (G). Ensure that the arrow on the filter cartridge points downwards.
10. Place the spring (E) on top of the filter cartridge.
11. Refit the top (C) of the filter housing.
12. Place the washers (B) on each of the threaded rods
13. Fit the four wing nuts (A) and hand tighten.

A0409LPX

Finalization

14. Switch on the laser device (see Section 6.2.3 on page 128).
15. Press <F4> on the hand-held terminal.
16. Press the numerical button <0> to reset the filter filling ratio and press <ENTER> to confirm.

Filter Cartridge Disposal



WARNING
Toxic hazard!
The halogen filter may contain halogen gas that has not reacted. Therefore, for safety reasons, a storage period prior to disposal is necessary . Observe the storage period and pre-disposal procedure indicated in this section and the information in the filter packaging.

17. Store the filter cartridge for 6 hours in a well-ventilated location.
18. Immerse the filter cartridge in 10 liters of water for 24 hours.
19. Place the filter cartridge inside the plastic bag removed from the new filter and seal the bag by means of the supplied twist-tie.
20. Dispose of the filter cartridge in accordance with local regulations.
21. Dispose of the water according to all locally applicable regulations.

NOTE
Local waste water regulations may require that the water be neutralized. For neutralization, use calcium hydroxide if the pH value is less than 7 or acetic acid if the pH value exceeds 7.

7.11 Preparation for Transport / Storage

During transportation or longer periods of non-operation (e.g. storage), gases can enter

– the laser tube and damage the passivation layer,

– the gas lines and cause corrosion.

To prevent this, the laser tube has to be filled with a transportation fill and the gas lines have to be sealed.

A0409LPX

7.11.1 Transportation Fill

Fill the laser tube with a transportation gas filling when the laser device is to be transported or is not to be used for a longer period of time. The transportation fill routine evacuates the laser tube and fills it to 1500 mbar with buffer gas.

Tools and Materials



CAUTION
Incorrect handling will cause unnecessary downtime!
Only use gas cylinders with a remaining pressure of more than 10 bar (abs.) to ensure that there is an adequate gas supply to perform gas actions. Depending on the configuration of the gas system, pressures of below 20 bar (abs.) may be critical.

- Buffer gas as specified (see Section 4.3 on page 72). Gas cylinder with a remaining pressure of at least 10 bar (abs.) connected to the buffer gas connection of the laser device.

Preconditions



CAUTION
The laser device is to remain powered up during this procedure!
Ensure that the maintenance area is at all times adequately secured and that no unauthorized persons can access the laser device.
All persons in the maintenance area shall be fully familiar with the applicable safety regulations and requirements

- Laser device switched on and laser ready to operate (no radiation being emitted).
- All gas cylinder valves and pressure regulators closed

Performing a Transport Fill

1. Open the buffer gas cylinder valve.
2. Set the pressure regulator in the buffer gas line to the specified value. (see Section 4.3 on page 72).
3. Press <F6>.
   The bottom line of the handheld keypad display shows a selection of options.
4. Press <Cursor Right> and/or <Cursor Left> to select “TRANSPORT”.
5. Press <ENTER> to confirm the selection.

A0409LPX

6. Press <EXE> to start the transport gas filling.
   The tube is evacuated and filled to 1500 mbar with buffer gas.

NOTE
A) Only interrupt the procedure by pressing <BREAK> in case of an emergency. As the procedure will be immediately interrupted and the fill is incomplete, there may be insufficient pressure in thelaser tube. In this case, restart the transportation fill.
B) The message ”SAFETY FILL“ appears if the evacuation was unsuccessful (the remote command OPMODE? returns the reply SAFETY FILL). As there is most likely a leak, a safety fill will be automatically started.

7.11.2 Disconnect Gas Lines

Purpose

The gas supply lines are to be disconnected when de-installing, transporting and storing the laser device. To prevent corrosion in the gas system, the halogen gas in the lines has to be replaced by inert gas before the lines are separated.

Tools and Materials

- 9/16 inch wrench
- 13 mm wrench
- Gyrolok stainless steel cap to seal the gas lines.
- Stainless steel plugs included with the laser device to seal the connections on the laser device.



CAUTION
Incorrect handling will cause unnecessary downtime!
Only use gas cylinders with a remaining pressure of more than 10 bar (abs.) to ensure that there is an adequate gas supply to perform gas actions. Depending on the configuration of the gas system, pressures of below 20 bar (abs.) may be critical.

- Inert gas as specified (see Section 4.3 on page 72). Gas cylinder with a remaining pressure of at least 10 bar (abs.) connected to the inert gas connection of the laser device.

A0409LPX

Preconditions



CAUTION
The laser device is to remain powered up during this procedure!
Ensure that the maintenance area is at all times adequately secured and that no unauthorized persons can access the laser device.
All persons in the maintenance area shall be fully familiar with the applicable safety regulations and requirements

- Laser device switched on and laser ready to operate (no radiation being emitted).
- All gas cylinder valves and pressure regulators closed

Disconnecting the Gas Lines

1. Purge the halogen gas line (see Section 7.4.2 on page 156).
2. Ensure that the halogen gas cylinder valve and pressure regulator are closed.
3. Use the 9/16“ wrench to disconnect the halogen gas line from the Gyrolok® fitting on the laser head.



CAUTION
Risk of gas line corrosion!
The gas lines can corrode if air and humidity penetrate into them. Prevent air and humidity penetration by sealing the connections on the laser head and gas lines with the corresponding plugs and caps. The gas line connections should always be sealed before transporting or storing the laser device

4. Seal the gas connection on the laser device with the corresponding plug.
5. Seal the gas supply line with the corresponding cap. The sealed lines may remain in this state for a longer period of time now.
6. Repeat steps 3 to 5 to disconnect and seal the other gas lines.

A0409LPX

8 CONTROL SOFTWARE

This chapter is intended for programmers who want to develop a user shell to remotely control the LPX*Pro* with an external computer system through the communication interface (CI).

The following sections describe the operating modes and commands that are required to control the laser device through the RS232 serial interface. These commands can either be sent through the handheld keypad provided with the laser device or through an external computer system.

NOTE
Familiarize yourself with the fundamantal procedures required to operate and maintain the LPX*Pro*, as described in chapters 6 and 7, before working with this chapter.

The software described in this chapter is the LPX*Pro* software version 4.8. The software version that is currently installed on your laser device can be called though the polling command ”VERSION?“ .

8.1 Communication Syntax

All commands are case insensitive text commands. Each command is terminated with the <CR> (Carriage Return) character.

Two fundamental types of commands are used:

- Setting commands:
  These are used to set laser operating modes or laser parameters.
- Polling commands:
  These are used to call the current laser status or parameter setting.

Setting Commands

Command syntax:	*name*=*setting*<CR>
Reply syntax:	*reply code*<CR>

Example:	The command
	`OPMODE=OFF<CR>`
	has to be sent to the communication interface (CI) to switch off the laser.
	The CI will send the reply
	`0<CR>`
	to indicate that the command is permitted and has been accepted.

A0409LPX

Polling Commands

Command syntax: *name*?<CR>

The syntax of the reply will depend on whether an operating mode (see Section 8.3 on page 221) or operating parameter (see Section 8.4 on page 236) is being polled:

Reply syntax for operating modes:
OPMODE=*setting,status*<CR>
or
OPMODE=*setting,status*,*status*<CR>
or
reply code<CR>

Reply syntax for operating parameters:
name=*setting*<CR>
or
name=*setting*,*setting*<CR>
or
reply code<CR>

Example:
The command
`OPMODE?<CR>`
has to be sent to the communication interface to find out the current operating mode of the laser. If the laser is ready for operation but at present switched off, the CI will send the reply `OPMODE=OFF,0<CR>`.
If the reply `2<CR>` is received, the entered polling command is unknown to the system controller and, consequently, cannot be processed.
The reply `1<CR>` will be sent when the new operating mode cannot be started from the current mode, e.g. when the command `OPMODE=NEW FILL` was sent while the laser was in the “ON“ mode.

A0409LPX

Syntax Description

name	The name OPMODE (to indicate an operating mode) or one of the parameter commands listed in Section 8.4.1. This can be either a setting command or a polling command.
setting	A word or numerical value that defines an operating mode or parameter setting. With numerical values, the character X in the descriptions in this chapter indicates each permitted place in the value (i.e. each digit between 0 and 9). Less positions or leading zeros are permitted. If the value has to be within a permitted range of values, this range is indicated in the respective command description. When a numerical value is to contain a special character (e.g. colon or decimal point), this is also indicated in the respective command description. Where more than one word or numerical value is required, the information separator is a comma.
reply code	One of the reply codes indicated in Section 8.2 on page 220.
status	One of the status codes listed in Section 8.3.4 on page 234.
=	Equals sign. This is always written between the name and setting in both setting commands and replies to polling commands.
?	Question mark. This is always written at the end of a command to indicate a polling command.
,	Comma. This is written as information separator when a setting consists of more than one word or numerical value.
<CR>	Carriage Return character. This is always inserted after each polling command, setting command or reply to terminate the command. The insertion of this character is assumed in the command syntax descriptions in the remainder of this chapter.

NOTE
Do not insert a blank before or after an equals sign, question mark, comma or CR character. If a blank is required within a command, this is indicated in the syntax of the individual command description.

A0409LPX

8.2 Reply Codes

The respective meaning of the possible reply codes together with any necessary corrective action is listed in the table below.

No.	Description	Action
0	Command/parameter accepted	—
1	Command/parameter not accepted in current laser mode	Change operating mode and send the desired command/ parameter again
2	Command/parameter unknown	Send correct command/ parameter name
3	Parameter value out of range	Send any value inside valid range

One of the above reply codes will always be sent as response to a setting command.

No reply code is sent when a valid polling command is received. In this case, acceptance of the command is indicated by the reply to the polling command. The reply code 2 will be sent as response to an invalid polling command.

The usage and meaning of the above listed reply codes applies to both laser operating modes and laser parameter commands.

A0409LPX

8.3 Operating Modes

The operating modes of the LPX*Pro* are changed and called through OPMODE commands (OPMODEs = “Operating Mode“) . In most cases, a change of operating mode will not influence the settings of the parameters.

The operating modes are changed with the command ”OPMODE=“ and the status is called through the polling command ”OPMODE?“ . The reply (OPMODE=*setting,status*) indicates the currently active operating mode and, where applicable, the status code.

8.3.1 Overview of Operating Modes

The available operating modes are listed in the following:

OPMODE	Function	Description
OFF	Switches the laser off	Section 8.3.3.1
ON	Switches the laser on to run with the currently active operating parameters	Section 8.3.3.2
SKIP	Interrupts the thyratron warm-up phase	Section 8.3.3.3
NEW FILL	Evacuates the laser tube and fills it with fresh laser gas	Section 8.3.3.4
PASSIVATION FILL	Evacuates the laser tube and fills it with a gas mixture for tube re-passivation (Halogen/Helium)	Section 8.3.3.5
PURGE RESERVOIR	Evacuates the laser tube and fills it with inert gas for purging	Section 8.3.3.6
SAFETY FILL	Fills the laser tube with inert gas in case of a leak	Section 8.3.3.7
TRANSPORT FILL	Evacuates the laser tube and fills it with buffer gas (Neon) for transport	Section 8.3.3.8
FLUSHING	Evacuates the laser tube and fills it with an inert gas to exchange the optics	Section 8.3.3.9
CONT	Continues the optics change procedure with a leak test	Section 8.3.3.10
HI	Injects halogen gas into the laser tube (HI)	Section 8.3.3.11
PGR	Exchanges part of the laser gas (PGR = partial gas replacement)	Section 8.3.3.12
MANUAL FILL INERT	Fills the laser tube for 10 seconds with inert gas	Section 8.3.3.13
FLUSH <xy> LINE	Evacuates the <xy> gas line for 2 seconds	Section 8.3.3.14
PURGE <xy> LINE	Evacuates the <xy> gas line for 5 seconds and fills it with inert gas	Section 8.3.3.15
CAPACITY RESET	Resets the filling level indicator for the halogen source	Section 8.3.3.16
LL OFF	Deactivates the low light function	Section 8.3.3.17
ENERGY CAL	Starts the routine for calibrating the energy monitor	Section 8.3.3.18

A0409LPX

8.3.2 Operating Mode Setting Restrictions

In some cases operating commands will not be accepted and the reply code “1” will be returned instead of “0” (see Section 8.2 on page 220). The table below indicates the respective reply to a command depending on the current operating mode.

Current OPMODE	Operating Mode (OPMODE) Received)						
	Off	On	HI / PGR	New Fill	Manual Fill Inert	Purge <xy> Line [a]	Purge Reservoir
Off	0	0	1	0	0	0	0
On	0	1	0[b]	1	0	1	1
HI / PGR	0	1	1	1	1	1	1
New Fill	0	1	1	1	1	1	1
Manual Fill Inert	0	1	0	1	1	1	1
Purge / Flush <xy> Line	0	1	1	1	1	1	1
Purge Reservoir	0	1	1	1	1	1	1

a. the restrictions also apply for the command FLUSH <xy> LINE
b. will only be accepted if a gas action (HI/PGR) is necessary

NOTE
Commands to execute service routines (Flushing, Transport Fill, Passivation Fill etc.) will only be accepted in the Off mode.

A0409LPX

8.3.3 Description of Operating Modes

This chapter describes the various operating modes as well as the commands that are to be used to change the mode and poll the current status.

8.3.3.1 OFF

In this mode the laser device is switched on and the laser controller is active. No action will be executed. this condition is activated:

– automatically after switching on the laser device,

– from the laser mode On, when the command to switch off the laser is sent,

– automatically after an interlock.

From the Off-mode, laser operation can be started and maintenance actions can be executed.

Syntax:

Setting:	OPMODE=OFF
Polling:	OPMODE?
Reply:	OPMODE=OFF OPMODE=OFF,WAIT OPMODE=OFF:aa

Syntax Description:

WAIT	During laser start-up: the laser waits for power supply standby and the gas circulation fan to start (duration: approx. 5 seconds)
aa	Status code (see Section 8.3.4 on page 234)

A0409LPX

8.3.3.2 ON

In this mode, the laser is switched on. Light pulses will be generated and emitted according to the currently active laser parameters. This mode is selected from the Off mode when the command to start the laser is sent. During the start delay period (see Section 8.3.3.1: OFF,WAIT) the laser start can be terminated by sending the command ”OPMODE=OFF“.

Syntax:

Setting:	OPMODE=ON
Polling:	OPMODE?
Reply:	OPMODE=ON OPMODE=ON:aa

Syntax Description:

aa	Status code (see Section 8.3.4 on page 234)

Status Code Priorities

It is possible that two or more ON status codes apply simultaneously. In this case the LPX*Pro* replies with the ON code with the highest priority.

The priority for each code is listed in the following table. A higher number corresponds to a higher priority. If two ON codes have the same priority, the LPX*Pro* displays the first ON code to occur.

Prioritity	**Message**	**Meaning**
5	ON:03	Duty Cycle exceeded
4	ON:9	NO VACUUM
	ON:10	LOW PRESSURE
	ON:13	FLUORINE VALVE NOT OPEN
3	ON:2	PRESET ENERGY TOO HIGH
	ON:8	NEW GAS FILL NEEDED
	ON:40	PRESET ENERGY TOO LOW
2	ON:34	HI (halogen injection) in preparation
1	ON:36	COD (Charge On Demand) ON
	ON:37	COD on at repetition rate >50 Hz
0	ON	Laser on, no warning message
	ON:0	Laser on, no warning message

For all other codes there are no priorities. This means that the last code displayed is the most current and the previous code has been deleted.

A0409LPX

8.3.3.3 SKIP

After sending the command to initially start laser opertion (On), the thyratron will be warmed up. The Skip command terminates the warm-up period.

Syntax:

Setting:	OPMODE=SKIP

8.3.3.4 NEW FILL

The laser tube is evacuated and filled with fresh laser gases.

Syntax:

Setting:	OPMODE=NEW FILL
Polling:	OPMODE?
Reply:	OPMODE=NEW FILL OPMODE=NEW FILL,XXXX OPMODE=NEW FILL:a

Syntax Description:

XXXX	Status	
	EVAC	Laser tube being evacuated
	WAIT	Leak test or halogen source being warmed up
	FILL	Laser tube being filled
a	Statuscode	
	3	No gas flow

A0409LPX

8.3.3.5 PASSIVATION FILL

The laser tube is evacuated and filled with halogen gas so that the tube can be re-passivated.

Syntax:

Setting:	OPMODE=PASSIVATION FILL
Polling:	OPMODE?
Reply:	OPMODE=PASSIVATION FILL OPMODE=PASSIVATION FILL:a

Syntax Description:

a	Status code	
	3	No gas flow

8.3.3.6 PURGE RESERVOIR

The laser tube is evacuated and filled (purged) with inert gas.

Syntax:

Setting:	OPMODE=PURGE RESERVOIR
Polling:	OPMODE?
Reply:	OPMODE=PURGE RESERVOIR OPMODE=PURGE RESERVOIR:a

Syntax Description:

a	Status code	
	3	No gas flow

A0409LPX

8.3.3.7 SAFETY FILL

This OPMODE can only be sent by the Communication Interface. The safety fill is started when the permissible period for the evacuation of the laser tube is exceeded (30 mbar is not reached within 11.5 minutes). The laser tube is automatically filled to 1050 mbar with the gas connected to the ”Buffer“ connection (Neon).

Syntax:

Setting:	OPMODE=SAFETY FILL
Polling:	OPMODE?
Reply:	OPMODE=SAFETY FILL OPMODE=SAFETY FILL:a

Syntax Description:

a	Status code	
	3	No gas flow

8.3.3.8 TRANSPORT FILL

The laser tube is evacuated and filled for transport or storage to 1050 mbar with the gas connected to the ”Buffer“ connection (Neon).

Syntax:

Setting:	OPMODE=TRANSPORT FILL
Polling:	OPMODE?
Reply:	OPMODE=TRANSPORT FILL OPMODE=TRANSPORT FILL:a

Syntax Description:

a	Status code	
	3	No gas flow

A0409LPX

8.3.3.9 FLUSHING

This routine is required to exchange the tube windows. The laser tube is evacuated and filled to 1050 mbar with inert gas. After exchanging the optics, a leak test is carried out and the laser tube is then filled with fresh laser gas.

Syntax:

Setting:	OPMODE=FLUSHING
Polling:	OPMODE?
Reply:	OPMODE=FLUSHING OPMODE=FLUSHING XXXX OPMODE=FLUSHING:aa OPMODE=FLUSHING XXX:aa

Syntax Description:

XXXX	Status	
	CONT	the routine enables the window exchange and waits for the command to continue
	LEAKTEST	Leak test after window exchange
	LEAKTEST CONT	the routine waits for the command to continue after the leak test
aa	Error message	
	3	No gas flow
	30	The laser tube is not leak tight

8.3.3.10 CONT

The window exchange routine stops twice to wait for user intervention. This command continues the routine after exchanging the optics and successfully completing the leak test.

Syntax:

Setting:	OPMODE=CONT

A0409LPX

8.3.3.11 HI

A halogen injection (HI) is carried out to refreshen the laser gas. The partial pressure of the halogen to be injected is indicated in the gas menu. With the halogen source, this command is executed after a warm-up period of 3 minutes.

Syntax:

Setting:	OPMODE=HI
Polling:	OPMODE?
Reply:	OPMODE=HI

8.3.3.12 PGR

A PGR (*P*artial *G*as *R*eplacement) is carried out to refreshen the laser gas. A portion of the gas in the laser tube is replaced by fresh gas. The partial pressure of the gases to be filled is indicated in the gas menu. With the halogen source, this command is executed after a warm-up period of 3 minutes.

Syntax:

Setting:	OPMODE=PGR
Polling:	OPMODE?
Reply:	OPMODE=PGR

8.3.3.13 MANUAL FILL INERT

Inert gas will be filled into the laser tube for 10 seconds. This command will only be accepted up to a tube pressure of 3000 mbar.

Syntax:

Setting:	OPMODE=MANUAL FILL INERT
Polling:	OPMODE?
Reply:	OPMODE=MANUAL FILL INERT

A0409LPX

8.3.3.14 FLUSH <XY> LINE

A gas line will be evacuated for 2 seconds. <XY> indicates the name of the line: BUFFER, HALOGEN, INERT or RARE.

Syntax:

Setting:	OPMODE=FLUSH <XY> LINE
Polling:	OPMODE?
Reply:	OPMODE=FLUSH <XY> LINE

Example:

Evacuating the halogen gas line:

OPMODE=FLUSH HALOGEN LINE<CR>
0<CR>

8.3.3.15 PURGE <XY> LINE

A gas line will be evacuated for 5 seconds and then filled for 2 seconds with inert gas. <XY> indicates the name of the line: BUFFER, HALOGEN, INERT or RARE.

Syntax:

Setting:	OPMODE=PURGE <XY> LINE
Polling:	OPMODE?
Reply:	OPMODE=PURGE <XY> LINE

Example:

Purging the halogen gas line:

OPMODE=PURGE HALOGEN LINE<CR>
0<CR>

A0409LPX

8.3.3.16 CAPACITY RESET

This command sets the filling level indicator of the halogen source to the value specified through the parameter command ”CAP.SET=“ .

Syntax:

Setting:	OPMODE=CAPACITY RESET

Example:

Set the halogen source filling level indicator to 100 %

CAP.SET=120<CR> (see Section 8.4.8.2, page 253)

0<CR>

Activate the reset to the indicated value

OPMODE=CAPACITY RESET<CR>

0<CR>

8.3.3.17 LL OFF

This command deactivates the Low Light function. When the Low Light function is active, laser operation is interrupted when more than 30 % of laser pulses are missing within a 10 second period.

Syntax:

Setting:	OPMODE=LL OFF
Polling:	OPMODE?
Reply:	OPMODE=OFF:aa

Syntax Description:

aa	Error message	
	26	Laser operation has been stopped with a Low Light interlock

A0409LPX

8.3.3.18 ENERGY CAL

The energy monitor will be calibrated. The functional sequence of the routine when cotrolling the laser device through an external PC is indicated in Figure 106 on page 233. The steps are indicated in the rectangles, the necessary commands are written in capital letters next to the corresponding steps.

Syntax:

Setting:	OPMODE=ENERGY CAL
Polling:	OPMODE?
Reply:	OPMODE=ENERGY CAL OPMODE=ENERGY CAL CONT

Syntax Description:

CONT	The routine waits for the input of a reference energy through the command ”EGY=“ or „EGY SET=“ (see Section 8.4 on page 236)

A0409LPX

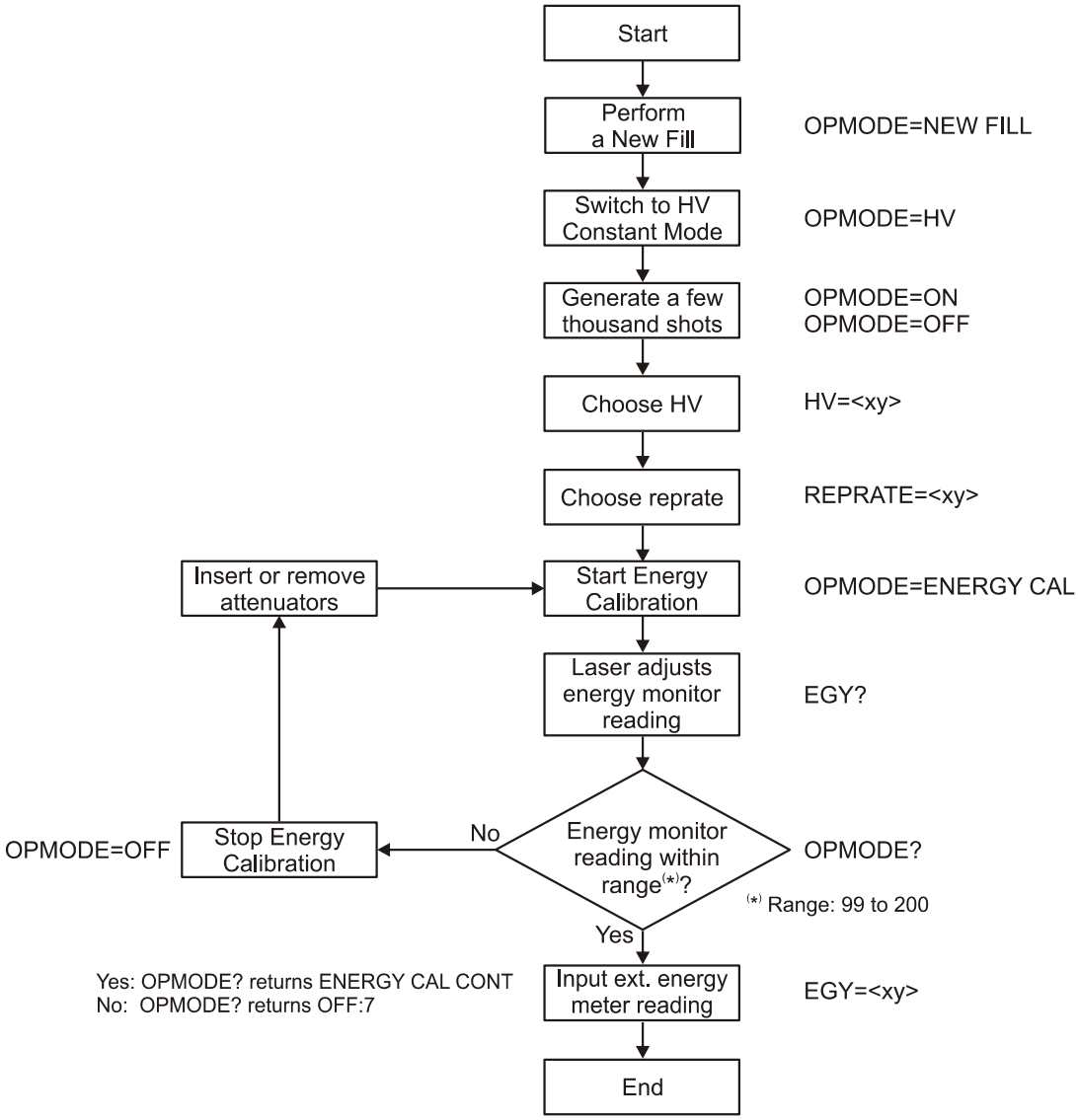

Figure 106: *Calibrating the energy monitor*

A0409LPX

8.3.4 Status Codes

Depending on the configuration of the laser device, the following status codes may be appended to the reply to an operating mode polling command (OPMODE=?)

No.	Description
0	No message, warning or interlock active
1	Interlock
2	PRESET ENERGY TOO HIGH HV loading voltage exceed HV_{max}
03	DUTY CYCLE (only with some laser devices) The duty cycle has been exceeded (more than 12,000 pulses in 20 minutes)
3	NO GASFLOW
4	A WATCHDOG has been activated
5	FATAL ERROR Error in the FOL data ring
6	POLLING At least one laser module does not reply
7	ENERGY CAL. ERROR The energy monitor signals are outside of the permissible range, the automatic signal amplification setting is malfunctioning
8	NEW GAS FILL NEEDED A new gas filling is necessary as the loading voltage exceeds HV_{max}
9	NO VACUUM The laser tube was unable to be evacuated. A safety gas fill was successfully carried out. All activities were interrupted
10	LOW PRESSURE (only with fluorine source) As the sixth fluorine filling was unsuccessful (low pressure), it is assumed that the fluorine source is empty
11	NO CAPACITY LEFT (only with halogen source) The halogen source is empty
12	ERROR TEMPERATURE MEASUREMENT (only with a halogen source) Error with the measurement of the halogen source temperature
13	FLUORINE VALVE NOT OPEN (only with a fluoring source) The fluorine source valve is closed or a fault has occurred during the filling procedure
21	WARM-UP 8min The thyratron is being warmed up.
26	LOW LIGHT The beam energy is too low. The energy monitor does not detect laser pulses after the trigger pulses (at least 30% of all pulses within a period of 10 seconds are missing).

(Sheet 1 of 2)

A0409LPX

No.	Description
27	WRONG PRESSURE The tube pressure is not within the permissible range (± 20 % outside of the tube pressure specified in the gas menu).
29	Mmory check malfunction. The gas data is lost
30	A leak in the laser tube has been detected after an optic change
31	TIMEOUT There has been no data transmitted through the RS232 within a second
33	HALOGEN PRESSURE TOO HIGH (only halogen source) The preset partial pressure for the halogen in the gas menu is too high for a halogen source (> 15 mbar)
34	HI IN PREP (only halogen source) A halogen injection is being prepared
35	NOT AVAILABLE (only halogen source) A function has been selected that is not available with the halogen source (e. g. the EGY PGR mode)
36	Charge On Demand (COD) is switched on
37	WARNING! REPRATE FOR COD > 50 Hz Charge On Demand (COD) is active and the repetition rate entered is higher than 50 Hz. The repetition rate has been reduced to the highest value permissible for COD of 50 Hz
39	INERT VALVE CLOSED The internal valve has been closed after a manual fill with inert gas, reason: the valve was open for 10 seconds or the tube pressure exceeds 3800 mbar.
40	PRESET ENERGY TOO LOW The beam energy entered is too low. The laser is running with the lowest HV, but the beam energy is still higher than the preset value.
41	The enetered energy value exceeds the value defined in the menu data by more than 5 %.

(Sheet 2 of 2)

A0409LPX

8.4 Laser Parameter Commands

To set or change laser operating parameters, parameter commands are used. The laser parameters are set or changed with the command *name=setting* and read with the polling command *Name*?.

8.4.1 Overview of Laser Parameters

The following table lists (in alphabetical order) the parameters that can be read (r) or set (s).

Name	Format	Unit	Access lesen/ setzen	Function	Description
ACCU	XXXX	mbar	r	Halogen source accumulator pressure	Section 8.4.8.1
BUFFER	XXXX	mbar	r/s	Buffer gas partial pressure	Section 8.4.5.2
CAP.LEFT	XXX	%	r	Remaining volume of halogen source	Section 8.4.8.2
CAP.SET	XXX	%	s	Volume of halogen source	Section 8.4.8.2
COD	ON or OFF	—	r/s	COD function active or inactive	Section 8.4.7.1
COUNTER	XXXXX or RESET	10^3 pulses	r s	Resettable counter reading Reset the counter readingk	Section 8.4.6.2
COUNTS	XXXXX	pulses	r/s	Amount of pulses for external triggering	Section 8.4.4.7
EGY	XXX.XX	mJ	r/s	Set value for beam energy in the EGY Const mode	Section 8.4.4.2
EGY SET	XXX.XX	mJ	r/s		
EGY RANGE	XXX	%	r/s	Tolerance range for beam energy	Section 8.4.4.3
FILTER	XX	pulses	r/s	Amount of pulses to calculate the average beam energy	Section 8.4.7.2
FILTER CONTAMINATION	XXX or RESET	% —	r s	Halogen filter filling level Reset filling level to zero	Section 8.4.7.3
GASMODE	SINGLE GASES or PREMIX	—	r/s	Gas mode: Single gases Gas mixtures (premix)	Section 8.4.5.1
HALOGEN	XXXX	mbar	r/s	Halogen gas partial pressure	Section 8.4.5.2
HV	XX.X	kV	r/s	Preset value for loading voltage in the HV Const. mode	Section 8.4.4.4
INERT	XXXX	mbar	r/s	Inert gas partial pressure	Section 8.4.5.2

(Sheet 1 of 2)

A0409LPX

Name	Format	Unit	Access lesen/ setzen	Function	Description
INTERLOCK	XX or NONE	—	r	List active interlocks	Section 8.4.7.4
LEAKRATE	XXXX	mbar / 2 min	r	Halogen (fluorine) source leak rate	Section 8.4.8.3
MENU	X or RESET	—	r/s s	Number of current gas menu Reset menu to factory settings	Section 8.4.5.3
MODE	HV, EGY NG R or EGY PG R	—	r/s	Operating mode	Section 8.4.4.1
POWER STABILIZATION ACHIEVED	YES or NO	—	r	Power stabilization according to ”EGY RANGE“ reached or not	Section 8.4.7.5
PRESSURE	XXXX	mbar	r	Laser tube pressure	Section 8.4.7.6
PULSE DRIFT	XXXX	Pulse	r	Difference between trigger pulses and laser pulses	Section 8.4.7.7
RARE	XXXX	mbar	r/s	Rare gas partial pressure	Section 8.4.5.2
RESERVOIR TEMP	XX.X	°C	r	Laser tube pressure	Section 8.4.7.8
REPRATE	XXXX	Hz	r/s	Repetition rate of laser pulses with internal triggering	Section 8.4.4.6
ROOMTEMP	XX.X	°C	r/s	Room temperature of HCl-source	Section 8.4.8.5
TEMP	XX.X	°C	r	Temperature of fluorine source	Section 8.4.8.4
TEMP CONTROL	ON or OFF	—	r/s	Laser tube temperature control active or inactive	Section 8.4.7.9
TIMEOUT	ON or OFF	—	r/s	Time-out for RS232 active or inactive	Section 8.4.6.3
TOTALCOUNTER	XXXXX	10^3 Pulse	r	Total counter reading	Section 8.4.6.1
TRIGGER	INT or EXT	—	r/s	Trigger source (internal or external)	Section 8.4.4.5
TYPE OF LASER	XXXXXX	—	r	Model of laser device	Section 8.4.9.1
VERSION	X.XX	—	r	Software version of the Communication Interface	Section 8.4.9.2

(Sheet 2 of 2)

A0409LPX

8.4.2 Operating Mode Setting Restrictions

In some cases operating commands will not be accepted and the reply code “1” will be returned instead of “0” (see Section 8.2 on page 220). The table below indicates the respective reply to a command depending on the current operating mode.

Parameter Command	Current Operating Mode (OPMODE)						
	Off	On	HI / PGR	New Fill	Manual Fill Inert	Purge <xy> Line [a]	Purge Reservoir
HV	0[b]	0[b]	1	1	1	1	1
EGY	0[c]	0[c]	1	1	1	1	1
Reprate	0	0	1	1	1	1	1
Mode	0	1	1	1	1	1	1
Counter	0	1	1	1	1	1	1

a. The limitations also apply for the command FLUSH <xy> LINE
b. Will only be accepted in the HV CONST mode
c. Will only be accepted in the EGY CONST mode

8.4.3 Parameter Polling Restrictions

In some cases, the parameter value indicated as a reply to a polling command will vary depending on the settings of other parameters. Such cases are indicated in the following table.

Current mode	Current OPMODE	HV?	EGY?
HV	Off, New Fill, Purge Reservoir, Purge / Flush <xy> Line	Set value	0
HV	On, HI / PGR	Set value	Measured value, 0, when the laser was off for at least 3 seconds
EGY NGR, EGY PGR	Off, New Fill, Purge Reservoir, Purge / Flush <xy> Line	Last applicable value	Set value
EGY NGR, EGY PGR	On, HI / PGR	Current value	Current value

A0409LPX

8.4.4 Running Modes and Operating Parameters

8.4.4.1 MODE

The laser can operate in the HV CONSTant mode or EGY CONSTant mode with or without gas actions (see Section 2.7 on page 32). This command sets or calls the running mode. It is available in all operating modes when the gas handling procedures have been completed.

Syntax:

Setting:	MODE=XXXX
Polling:	MODE?
Reply:	MODE=XXXX

Syntax Description:

XXXX	Running mode	
	HV	HV Const.
	EGY PGR	EGY Const. with gas actions
	EGY NGR	EGY Const. without gas actions

8.4.4.2 EGY and EGY SET

This setting command has three functions:

– In the EGY Const mode, the EGY sets the setpoint for the stabilization of the beam energy (”preset energy“). This value is reset when the laser device is next restarted. With some lasers, the function is executed through the parameter command EGY SET.

– When EGY=0 is sent in the EGY Const mode, the energy value is set to the value that is predefined through the parameter PRESET_EGY in the menu data.

– During energy monitor calibration, the EGY command is required to input the externally displayed energy value.

The EGY command is available in the operating modes OFF and ON.

The reply to the polling command EGY? or EGY SET? also differs depending on the currently active running mode:

– OFF: setpoint for the beam energy (in mJ).

– ON: measured beam energy (in mJ). If the request is repeated before the next trigger puls, 0 will be displayed.

– ENERGY CAL: current monitor reading (without unit).

A0409LPX

Syntax:

Setting:	EGY=aaa.aa or EGY SET=aaa.aa
Polling:	EGY? or EGY SET?
Reply:	EGY=aaa.aa or EGY SET=aaa.aa

Syntax Description:

aaa.aa	Beam energy	
	Variable	decimal, 3 places before and 2 places after decimal point
	Unit	mJ (with energy monitor calibration without unit)
	Range	indicated through gas menu

8.4.4.3 EGY RANGE

This command sets or calls the range of tolerance for the beam energy in relation to the set values in the EGY PGR or EGY NGR mode. This parameter is necessary for the indication of ”POWER STABILIZATION ACHIEVED“. The command is only available in the OFF mode.

Syntax:

Setting:	EGY RANGE=aaa
Polling:	EGY RANGE?
Reply:	EGY RANGE=aaa

Syntax Description:

aaa	Energy tolerance	
	Variable	integer, 3 places
	Unit	%
	Range	1 to 100

A0409LPX

8.4.4.4 HV

This command sets or calls the loading voltage for the HV Constant mode. The command is available in all operating modes. If the command has no purpose in the currently active mode, it will be ignored.

Syntax:

Setting:	HV=aa.a
Polling:	HV?
Reply:	HV=aa.a

Syntax Description:

aa.a	Loading voltage	
	Variable	decimal, 2 places before and 1 place after decimal point
	Unit	kV
	Range	set through gas menu

8.4.4.5 TRIGGER

The laser can be internally or externally triggered. This command sets or calls the triggering mode. The command is available in the ON and OFF modes.

Syntax:

Setting:	TRIGGER=XXX
Polling:	TRIGGER?
Reply:	TRIGGER=XXX

Syntax Description:

XXX	Trigger mode	
	INT	Internal trigger generator
	EXT	External trigger generator

NOTE
The internal trigger generator triggers a sequence of laser pulses without interruption. When interruptions are necessary (Burst mode), the external trigger mode has to be selected and an external trigger generator used.

A0409LPX

8.4.4.6 REPRATE

This command sets or calls the repetition rate (rep. rate) for the internally triggered laser pulses. The command is available in the ON and OFF modes.

Syntax:

Setting:	REPRATE=aaaa
Polling:	REPRATE?
Reply:	REPRATE=aaaa

Syntax Description:

aaaa	Repetition rate	
	Variable	integer, 4 places
	Unit	Hz
	Range	as determined in the gas menu; with a higher loading voltage, the maximum repetition rate can be reduced

NOTE
With internal triggering active, the new repetition rate becomes immediately effective. In the external trigger mode, the new repetition rate will become effective when internal triggering is next activated.

A0409LPX

8.4.4.7 COUNTS

When external triggering is active, the laser can be set to generate a preset number of laser pulses. This command enables the countdown value to be set or called. The laser will only accept external trigger pulses until the indicated amount is reached. After that the laser will stop and COUNTS will be set to zero. The command is only available in the OFF mode.

Syntax:

Setting:	COUNTS=aaaaa
Polling:	COUNTS?
Reply:	COUNTS=aaaaa

Syntax Description:

aaaaa	Amount of pulses	
	Variable	integer, 5 places
	Unit	pulses
	Range	0 to 65535

NOTE
The polling command COUNTS? indicates the currently set countdown counter value and not the current counter reading.

8.4.5 Gas System and Gas Supply

8.4.5.1 GAS MODE

The LPX*Pro* can be supplied from premix gas cylinders or single gas cylinders (see Section 4.3 on page 72). This command sets or calls the gas mode. The command is only available in the OFF mode.

Syntax:

Setting:	GASMODE=XXXX
Polling:	GASMODE?
Reply:	GASMODE=XXXX

Syntax Description:

XXXX	Gas mode	
	PREMIX	Supply from premix gas cylinders
	SINGLE GASES	Supply from single gas cylinders

A0409LPX

8.4.5.2 HALOGEN, RARE, BUFFER and INERT

The LPX*Pro* can be supplied from up to four different gas cylinders (see Section 4.3 on page 72). These commands set the partial pressures for the individual gases in the currently active gas gas menu when the values are within the permitted range. The commands are only available in the OFF mode.

Syntax:

Setting:	*Gas*=aaaa (e.g. HALOGEN=aaaa)
Polling:	*Gas*? (e.g. HALOGEN?)
Reply:	*Gas*=aaaa (e.g. HALOGEN=aaaa)

Syntax Description:

Gas	HALOGEN, RARE, BUFFER or INERT	
aaaa	Gas partial pressure	
	Variable	integer, 4 places
	Unit	mbar
	Range	indicated through gas menu

Example:

Set the halogen partial pressure to 100 mbar:

HALOGEN=100<CR>

0<CR>

Call the buffer partial pressure:

BUFFER?<CR>

BUFFER=2340<CR>

NOTE

The partial pressure for the halogen cylinder has to be approx. 20 times higher than the partial pressure of the halogen source as in the gas cylinders there is 5 % halogen in 95 % inert gas.

A0409LPX

8.4.5.3 MENU

The gas menus enable imprortant settings for the operation of the LPX*Pro* to be defined. The gas menus contain information regarding:

– Types of gases being used,

– Wavelength,

– Gas mode (see ”GAS MODE“, Section 8.4.5.1),

– Partial pressures of the gases,

– Predefined tube pressure (see also status code no. 27),

– Limits for the loading voltage (HV_{min}, HV_{max}),

– Predefined constant beam energy value

The MENU command enables the gas menu to be selected or requested or resets the values in the currently selected gas menu to the factory settings. The command is only available in the OFF mode.

Syntax:

Setting:	MENU=a MENU=RESET
Polling:	MENU?
Reply:	MENU=a,bbb,ccc

Syntax Description:

a	Gas menu number
	1 to 6 Menu number 1 to 6
bbb	Wavelength of the gas menu in nm (e.g. 193)
ccc	Gas mixture of the gas menu (e.g. ArF)
RESET	Command to reset the settings in the selected gas menu back to the factory settings

Example:

Call the currently selected gas menu:

MENU?<CR>

MENU=1<CR>

Activate gas menu no. 2:

MENU=2<CR>

0<CR>

Reset the currently selected gas menu to the factory settings:

MENU=RESET<CR>

0<CR>

A0409LPX

8.4.6 Pulse and Time Counters

8.4.6.1 TOTALCOUNTER

This command requests the amount of pulses (divided by 1000) during the total working lifetime of the laser. The requested counter cannot be reset. The command is only available in the OFF mode.

Syntax:

Polling:	TOTALCOUNTER?
Reply:	TOTALCOUNTER=aaaaaa

Syntax Description:

aaaaaa	Total counter reading (10^3 pulses)

8.4.6.2 COUNTER

This command requests the current reading (divided by 1000) of the resettable counter or resets the counter to zero. The command is only available in the OFF mode.

Syntax:

Setting:	COUNTER=RESET
Polling:	COUNTER?
Reply:	COUNTER=aaaaaa

Syntax Description:

RESET	Reset the counter reading to zero
aaaaaa	Counter reading of the resettable counter (10^3 pulses)

A0409LPX

8.4.6.3 TIMEOUT

To enable interruptions in the communication between the laser device and remote PC to be detected, the flow of data through the serial interface (RS232) can be monitored. The TIMEOUT command switches the RS232 time out function on and off. When TIMEOUT is switched on and there is no data flow through the RS232 within a period of one second, the laser will be shut down with the error code 31 (the polling command OPMODE? will produce the response OFF:31). The command is only available in the OFF mode.

NOTE
When the time out function is active, there should be continuous communication through the RS232 interface. Where necessary, program the remote PC with continuous requests to ensure that communication with the laser device is not interrupted resulting in the laser device being unexpectedly switched off.

Syntax:

Setting:	TIMEOUT=XXX
Polling:	TIMEOUT?
Reply:	TIMEOUT=XXX

Syntax Description:

XX	Condition	
	ON	active
	OFF	inactive

A0409LPX

8.4.7 System Status and Maintenance

8.4.7.1 COD

This command switches the optional Charge On Demand function on and off. The COD function can only be switched on and off in the OFF mode. If the COD polling command is sent in the ON mode, the reply will indicate the time delay between the trigger signal and laser pulse, i.e. the capacitor loading time for each pulse.

NOTE
When operating the laser device with COD, only use repetition rates up to 50 Hz. Higher repetition rates cause missing pulses and are, therefore, set back to 50 Hz.

Syntax:

Setting:	COD=XX
Polling:	COD?
Reply:	COD=XX COD=aaa

Syntax Description:

XX	Condition (in OFF mode)	
	ON	active
	OFF	inactive
aaa	Delay time (in ON mode)	
	Variable	integer, 3 places
	Unit	µs
	Value	depending on laser device

Example:

Activate the COD function in the OFF mode:
COD=ON<CR>
0<CR>
Resquest the COD function status in the OFF mode:
COD?<CR>
COD=ON<CR>
Request the time delay in the ON mode:
COD?<CR>
COD=125<CR>

A0409LPX

8.4.7.2 FILTER

This command sets and requests the amount of pulses that are required to calculate the average beam energy. When the input is outside of the permissible range, the last FILTER value is retained. When “0” is entered, the program will automatically set a filter value in relation to the repetition rate. The command is available in all modes.

Syntax:

Setting:	FILTER=aa
Polling:	FILTER?
Reply:	FILTER=aa

Syntax Description:

aa	Filter value	
	Variable	integer, 2 places
	Unit	—
	Value	0 (automatic filter value), 1, 2, 4, 8, 16

8.4.7.3 FILTER CONTAMINATION

This command requests capacity of the halogen filter (in percent) and resets the capacity (after exchanging the filter). The command is available in all modes.

Syntax:

Setting:	FILTER CONTAMINATION=RESET
Polling:	FILTER CONTAMINATION?
Reply:	FILTER CONTAMINATION=aaa

Syntax Description:

RESET	Reset command; sets the capacity after a filter exchange back to 100 %	
aaa	Filter filling level	
	Variable	integer, 3 places
	Unit	%
	Value	0 to 100

A0409LPX

8.4.7.4 INTERLOCK

This reply to this polling command lists alls active interlocks. After the request, the interlock messages are deleted. The command is available in all modes.

Syntax:

Polling:	INTERLOCK?
Reply:	INTERLOCK=NONE INTERLOCK=XXX[,XXX,XXX]

Syntax Description:

NONE	No interlock active
XXX	Name of the interlock if more than one interlock is active, they are separated from each other by commas

8.4.7.5 POWER STABILIZATION ACHIEVED

This command requests if the preset stabilization of the beam energy has been reached. It is only available in the ON mode.

Syntax:

Polling:	POWER STABILIZATION ACHIEVED?
Reply:	POWER STABILIZATION ACHIEVED=XXX

Syntax Description:

XXX	Condition	
	YES	Stabilization reached
	NO	Stabilization not reached

A0409LPX

8.4.7.6 PRESSURE

This command requests the current pressure in the laser tube. It is available in all modes.

Syntax:

Polling:	PRESSURE?
Reply:	PRESSURE=aaaa

Syntax Description:

aaaa	Tube pressure	
	Variable	integer, 4 places
	Unit	mbar
	Value	specified through gas menu

8.4.7.7 PULSE DIFF

This command requests the difference between the amount of trigger pulses and the amount of laser pulses that reach the energy monitor. After the request or when the laser is sarted, the pulse difference is set to zero. Negative values indicate that there are fewer laser pulses than trigger pulses. With the laser switched on, the value can deviate from the actual value by ±1.

Syntax:

Polling:	PULSE DIFF?
Reply:	PULSE DIFF=[-]aaa

Syntax Description:

aaa	Pulse difference	
	[-]	negative sign for fewer laser pulses
	Unit	pulses
	Value	current difference

A0409LPX

8.4.7.8 RESERVOIR TEMP

This command requests the current temperature of the laser tube.

Syntax:

Polling:	RESERVOIR TEMP?
Reply:	RESERVOIR TEMP=aa.a

Syntax Description:

aa.a	Temperature of the laser tube	
	Variable	decimal, 2 places before and 1 place after decimal point
	Unit	°C
	Range	1 to 60

8.4.7.9 TEMP CONTROL

This command requests the status of the laser tube temperature control module.

Syntax:

Setting:	TEMP CONTROL=XXX
Polling:	TEMP CONTROL?
Reply:	TEMP CONTROL=XXX

Syntax Description:

XXX	Status of temperature control	
	ON	temperature control active
	OFF	temperature control inactive
	N/A	Temperature control module not available (reply only)

A0409LPX

8.4.8 Halogen Source

8.4.8.1 ACCU

(Halogen source)
This command requests the current pressure of the halogen source accumulator. The reply is zero when there is no halogen source.

Syntax:

Polling:	ACCU?
Reply:	ACCU=aaaa

Syntax Description:

aaaa	Pressure in halogen source accumulator	
	Variable	integer, 4 places
	Unit	mbar
	Value	current pressure

8.4.8.2 CAP.SET and CAP.LEFT

(Halogen source)
This command sets and requests the remaining volume of the halogen source. It is only available in the OFF mode.

Syntax:

Setting:	CAP.SET=aaa
Polling:	CAP.LEFT?
Reply:	CAP.LEFT=aaa

Syntax Description:

CAP.SET	Command to set the halogen source capacity	
CAP.LEFT	Command to request the halogen source capacity	
aaa	Capacity of the halogen source	
	Variable	integer, 3 places
	Unit	%
	Range	0 to 120 (F_2 source) or 0 to 100 (HCl source)

NOTE
For the new capacity value to be accepted, the command ”CAP.SET=aaa“ has to follow the command ”OPMODE=CAPACITY RESET“.

A0409LPX

8.4.8.3 LEAKRATE

(F_2 source)
The F_2 source leak test will be carried out during a new gas fill. After the gas has been filled, the laser selects the standby mode to check if there is a loss of gas. The LEAKRATE command requests the loss of pressure.

Syntax:

Polling:	LEAKRATE?
Reply:	LEAKRATE=aaa

Syntax Description:

aaa	Leak rate of the F_2 source	
	Variable	integer, 3 places
	Unit	mbar / 2 min
	Value	current leak rate

8.4.8.4 TEMP

(F_2 source)
This command requests the temparature of the heating element of the integrated F_2 source. If no F_2 source is connected, the reply is ”0“. The command can be sent in all modes. The current heater will, however, only be indicated in the NEW FILL mode.

Syntax:

Polling:	TEMP?
Reply:	TEMP=aa.a

Syntax Description:

aa.a	Temperature of the F_2 source	
	Variable	decimal, 2 places before and 1 place after decimal point
	Unit	°C
	Value	current temperature

A0409LPX

8.4.8.5 ROOMTEMP

(HCl source)
As the chemical reaction in the HCl source is temperature-dependent, the ROOMTEMP command indicates to the source the room temperature range. When the laser device is started, the parameter is set to ”HIGH“ (standard value). When no HCl source is connected, the setting will also be ”HIGH“. The command is available in al modes.

Syntax:

Setting:	ROOMTEMP=XXXX
Polling:	ROOMTEMP?
Reply:	ROOMTEMP=XXXX

Syntax Description:

XXXX	Room temperature range	
	HIGH	temperature above 22 °C
	LOW	temperatur below 22 °C

8.4.9 General Information

8.4.9.1 TYPE OF LASER

This command requests the type (model) of laser device.

Syntax:

Polling:	TYPE OF LASER?
Reply:	TYPE OF LASER=XXXXXXX

8.4.9.2 VERSION

This command requests the version of the control software that is used by the Communication Interface.

Syntax:

Polling:	VERSION?
Reply:	VERSION=VX.XX

A0409LPX

A0409LPX

9 TROUBLESHOOTING

This chapter describs the detection and rectification of faults that may occur when using the LPX*Pro* laser device. It assumes that you are familar with the contents of this manual, particularly the safety instructions.



WARNING
Risk of serious injury and material damage!
Working procedures that shall only be performed by specially trained and authorized service personnel, represent a serious health and safety risk to untrained persons. Only perform procedures for which you have received specific training and authorization.

This possible faults are grouped in this chapter according to symptoms or the means of indication or (e.g. faults that are indicated by interlock messages or perceivable faults such as self-firing). This chapter contains the following sections:

Subject	Description
Warnings and error messages	Section 9.1 on page 258
Interlocks	Section 9.2 on page 272
Self-firing (laser fires a shot without a trigger pulse)	Section 9.3 on page 275
No trigger signal	Section 9.4 on page 275
Corrosion in gas system	Section 9.5 on page 276
Laser device does not start	Section 9.6 on page 277
Beam energy too low	Section 9.7 on page 278
Low light	Section 9.8 on page 283
Fuses	Section 9.9 on page 288

A0409LPX

9.1 Warnings and Error Messages

This section describes warning and error messages sent by the communication interface. The display on the handheld keypad is different to the command sent through the serial interface to an external PC.

For quick reference, the messages are:

– listed in the following table in alphabetical order of the message sent to the external PC. A cross reference indicates the subsection in which the message is described in more detail.

– are described in the following subsections in alphabetical order of the handheld keypad display. The corresponding message sent to the external PC can be taken from the following table.

Message to External PC	Handheld Keypad Message	Description
FLUSHING LEAKTEST:3	No Gas Flow	Section 9.1.17
FLUSHING LEAKTEST CONT:30	Leak! - Check Windows	Section 9.1.12
NEW FILL:3	No Gas Flow	Section 9.1.17
OFF:1	Interlock XXX	Section 9.1.11
OFF:2	Preset Energy Too High	Section 9.1.25
OFF:4	Fatal Error, Watchdog	Section 9.1.6
OFF:5	Fatal Error, LWL-Datalink	Section 9.1.5
OFF:6	Polling	Section 9.1.24
OFF:7	Energy Cal. Error	Section 9.1.2
OFF:8	New Gas Fill Needed	Section 9.1.15
OFF:9	No Vacuum	Section 9.1.18
OFF:10	Low Pressure	Section 9.1.14
OFF:11	No Capacity Left	Section 9.1.16
OFF:12	Error Temperature Measurement	Section 9.1.3
OFF:13	Fluorine Valve Not Opened	Section 9.1.7
OFF:21	Warm-up 8 min	Section 9.1.28
OFF:26	Low Light	Section 9.1.13
OFF:27	Wrong Pressure	Section 9.1.29
OFF:29	RAM Check Error	Section 9.1.26
OFF:31	Timeout	Section 9.1.27
OFF:33	Halogen Pressure Too High	Section 9.1.8
OFF:35	Not Available	Section 9.1.20
OFF:39	Inert Valve Closed	Section 9.1.10
OFF:41	OFF:41	Section 9.1.21
ON:2	Preset Energy Too High	Section 9.1.25

(Sheet 1 of 2)

A0409LPX

Message to External PC	Handheld Keypad Message	Description
ON:03	Duty Cycle Exceeded	Section 9.1.1
ON:8	New Gas Fill Needed	Section 9.1.15
ON:9	No Vacuum	Section 9.1.19
ON:10	Low Pressure	Section 9.1.14
ON:13	Fluorine Valve Not Opened	Section 9.1.7
ON:34	HI In Prep	Section 9.1.9
ON:40	ON:40	Section 9.1.22
ON:41	ON:41	Section 9.1.23
PASSIVATION FILL:3	No Gas Flow	Section 9.1.17
PURGE RESERVOIR:3	No Gas Flow	Section 9.1.17
SAFETY FILL:3	No Gas Flow	Section 9.1.17
TRANSPORT FILL:3	No Gas Flow	Section 9.1.17
—	Fatal Error, Com-Datalink	Section 9.1.4

(Sheet 2 of 2)

NOTE
The error ”Fatal Error, Com-Datalink“ is only indicated on the handheld keypad.

9.1.1 Duty Cycle Exceeded (ON:03)

Reason:

The laser has exceeded its duty cycle (more than 12000 pulses in any 20 minutes). This warning message will not be indicated by all lasers.

Solution:

Run the laser for a period of time at a lower repetition rate.

9.1.2 Energy Cal. Error (OFF:7)

Reason:

The energy reading could not be adjusted within a range of 99-200 during the energy calibration procedure (see Section 7.7.1 on page 193).

Solution:

Vary the number of attentuators or re-adjust the iris in front of the photodiode. Call Lambda Physik service.

A0409LPX

9.1.3 Error Temperature Measurement (OFF:12)

This is an error message relating to the fluorine source. Please refer to the fluorine source's manual for further information.

9.1.4 Fatal Error, COM-Datalink (-)

(Only displayed on the handheld keypad, not sent to the external PC) Communication between handheld keypad and communication interface is interrupted.

Reason (1):

Handheld keypad and laser device are not properly connected.

Solution:

Switch off the laser device and re-connect the handheld keypad to the laser device.

Reason (2):

Communication link damaged.

Solution:

Call Lambda Physik service.

9.1.5 Fatal Error, LWL-Datalink (OFF:5)

LWL is the German language abbreviation for 'Lichtwellenleiter', a Fiber Optics Light Waveguide (FOL).

Reason (1):

The FOL data ring is improperly connected.

Solution:

1. Switch off the laser device, gain access to the communication interface and remove the communication interface without disconnecting the FOLs.
2. Ensure that all FOLs are properly connected. Each FOL is marked with a code indicating the port to which it is to be connected.

A0409LPX

Reason (2):

FOL data ring interrupted or a module damaged.

Solution:

1. Switch off the laser device, gain access to the communication interface and remove the communication interface without disconnecting the FOLs.
2. Ensure that all FOLs are properly connected to their ports (energy monitor, communication interface, gas handling module).
3. Check that all FOLs have a min. bending radius of 50 mm.
4. Ensure that the Communication Interface is sending a (red) light pulse.

   After switching on the 24 V power supply, the communication Interface should send a light pulse for a few seconds. To check this you will need the help of an additional person. Proceed as follows:
   - I. (1st person) Disconnect the Data Out FOL from the communication interface.
   - II. (2nd person) Switch on the 24 V power supply with the key switch.
   - III. (1st person) Watch for a light signal in the Data Out socket of the communication interface for several seconds. If there is no light, the communication interface is damaged. Call Lambda Physik service.
   - IV. Switch off 24 V power supply with the key switch.
   - V. Re-connect the Data Out FOL to the communication interface.
5. Ensure that the FOL data ring is closed:

   To check this you will need the help of an additional person. Proceed as follows:
   - I. (1st person) Disconnect the Data In FOL from the communication interface
   - II. (2nd person) Switch on the 24 V power supply with the key switch.
   - III. (1st person) Watch for a light signal in the Data In FOL for several seconds. If none appears, a module is damaged. Call Lambda Physik service.
   - IV. Switch off the 24 V power supply with the key switch.
   - V. Re-connect the Data In FOL to the communication interface.

A0409LPX

6. Check for defective FOLs.

   To check this you will need the help of an additional person. Proceed as follows:

   - I. (1st person) Disconnect Data In FOL from the energy monitor.
   - II. (2nd person) Switch on the 24 V power supply with the key switch.
   - III. (1st person) Watch for a light signal in the Data In FOL for several seconds. If one appears, FOL is in order. If not, remove the FOL.
   - IV.(2nd person) Switch off 24 V power supply with the key switch.
   - V. (1st person) Disconnect Data In FOL from gas handling module.
   - VI. (2nd person) Switch on the 24 V power supply with the key switch.
   - VII. (1st person) Watch,for a light signal in the Data In FOL for several seconds. If one appears, the FOL is in order. If not, remove the FOL.
   - VIII. (2nd person) Switch off the 24 V power supply with the key switch.

   If the LPX*Pro* has no built-in halogen source,omit steps IX to XII.

   - IX. (1st person) Disconnect Data In FOL from halogen source.
   - X. (2nd person) Switch on the 24 V power supply with the key switch.
   - XI. (1st person) Watch,for a light signal in the Data In FOL for several seconds. If one appears, the FOL is in order. If not, remove the FOL.
   - XII. (2nd person) Switch off the 24 V power supply with the key switch.

7. If all FOLs are working, one of the modules is damaged. In this case, call Lambda Physik service.

Reason (3):

Software is not compatible with a newly installed module.

Solution:

Call Lambda Physik service.

A0409LPX

9.1.6 Fatal Error, Watchdog (OFF:4)

Reason:

Gas handling module does not respond.

Solution:

Switch off the laser device, wait a minute and restart. If problem remains, call Lambda Physik service.

9.1.7 Fluorine Valve Not Opened (OFF:13; ON:13)

This is a warning or error message relating to the fluorine source. Please refer to the fluorine source's manual for further information.

9.1.8 Halogen Pressure Too High (OFF:33)

This is an error message relating to the fluorine source. Please refer to the fluorine source's manual for further information.

9.1.9 HI in Prep (ON:34)

This is a warning message relating to the fluorine source.

Reason:

The halogen source is just preparing a halogen injection. This may last a few minutes.

Solution:

Wait a few minutes.

A0409LPX

9.1.10 Inert Valve Closed (OFF:39)

Reason:

A manual fill of inert gas has been terminated.

This message is either a warning or an error message:

– Warning: the inert valve was open for 10 seconds and is now closed.

– Error message: the tube pressure exceeded 3800 mbar during the fill. Therefore, the fill has been terminated.

Solution:

1. Warning: No action required.
2. Error message: Reduce the tube pressure.

9.1.11 Interlock XXX (OFF:1)

Reason:

A serious malfunction has occurred (XXX" indicates the name of an interlock).

With a handheld keypad the name of the interlock is displayed.

When the laser is controlled through an external PC, the interlock can be identified using the command INTERLOCK?.

Solution:

See Section 9.2 on page 272.

9.1.12 Leak!-Check Windows (FLUSHING LEAKTEST CONT:30)

Reason:

A leak test during the flushing procedure has failed.

Solution:

Check the tube windows for leaks. After solving the problem continue by pressing <ENTER> (with external PC: send OPMODE=CONT).

A0409LPX

9.1.13 Low Light (OFF:26)

The energy monitor has not detected a laser light pulse after a trigger pulse.

Reason:

At least 30% of all pulses within 10 seconds are missing.

Solution:

See Section 9.8 on page 283.

9.1.14 Low Pressure (OFF:10; ON:10)

This is a warning or error message relating to the fluorine source. Please refer to the fluorine source's manual for further information.

9.1.15 New Gas Fill Needed (OFF:8; ON:8)

This message only occurs in Energy Constant Mode. It may be either a warning or an error message:

– Warning: the charging voltage has exceeded the threshold voltage HV_{repl}.

– Error message: the charging voltage has exceeded the maximum possible voltage HV_{max}.

Reason (1):

The laser gas is of insufficient quality.

Solution:

Perform a New Fill (see Section 7.5.1 on page 168).

Reason (2):

The EGY Const. value is too low. Consequently the HV is lower than the lasing threshold.

Solution:

Increase the EGY Const. value.
If the problem remains, follow the flowchart "Beam Energy too Low" (see Section 9.7 on page 278).

A0409LPX

9.1.16 No Capacity Left (OFF:11)

This is an error message relating to the halogen source. Please refer to the halogen source's manual for further information.

9.1.17 No Gas Flow (XX:3)

No gas flow has been detected in one of the gas lines. With control from an external PC, "XX" represents the name of the operating mode (OPMODE) at which the error occurred (e.g. PASSIVATION FILL, PURGE RESERVOIR etc.).

Reason (1):

Gas cylinder valve not opened.

Solution:

Open the gas cylinder valve.

Reason (2):

Incorrect pressure regulator setting.

Solution:

Set the pressure regulator to the necessary value (see Section 4.3 on page 72).

Reason (3):

Gas cylinder pressure too low

Solution:

Exchange the gas cylinder (see Section 7.4.3 on page 158 or Section 7.4.4 on page 163).

A0409LPX

9.1.18 No Vacuum (OFF:9)

This error message is displayed after a safety fill.

NOTE
With a handheld keypad, do not confuse the warning and the error message “No Vacuum”. The warning is a function of the optional halogen source while injecting or filling the laser tube with halogen.The error only occurs after an unsuccess-ful evacuation of the laser tube.

Symptom (1):

Vacuum Pump did not run.

Reason:

Vacuum Pump defective.

Solution:

1. Switch off and secure the laser device.
2. Ensure that the vacuum pump power supply line is properly connected to the LPX*Pro*.
3. Check the vacuum pump fuse. Replace, if necessary.
4. Visually check the vacuum pump power supply line.

Symptom (2):

Vacuum Pump continues to run.

Reason:

Laser tube has a leak.

Solution:

1. Switch off and secure the laser device.
2. Ensure that there is no leak at the tube optics. If there is a leak which cannot be sealed, call Lambda Physik service.
3. Perform a leak test in the gas line to the vacuum pump. If leaky, replace line.
4. Check halogen filter for leak. For this purpose check the O-rings inside the halogen filter housing for damage and replace the O-rings if necessary. Check if the butterfly nuts on the halogen filter housing are tightened (see Section 7.10.2 on page 210). If the problem remains, call Lambda Physik service.

A0409LPX

9.1.19 No Vacuum (ON:9)

This is a warning message relating to the halogen source. It occurs when a predefined minimum pressure is not reached after evacuating the gas system inside the halogen source.

To solve the problem follow the instructions described in Section 9.1.18. Additionally refer to the instructions concerning this warning message in the halogen source's manual.

9.1.20 Not Available (OFF:35)

This is a warning message relating to the halogen source. It occurs when attempting to call a function which is not available when operating the LPX*Pro* with a halogen source (e.g. when performing a partial gas replacement).

9.1.21 OFF:41 (OFF:41)

The message "OFF:41" appears on the handheld keypad as well as being sent through the serial interface to an external PC.

Reason:

In the Energy Constant Mode, the entered energy value exceeds the set value in the menu data by more than 5 %. The laser is in the OFF mode.

Solution:

Enter a lower (valid) value.

9.1.22 ON:40 (ON:40)

The message "ON:40" appears on the handheld keypad as well as being sent through the serial interface to an external PC.

Reason:

In the Energy Constant Mode, the HV is adjusted to the lowest possible value but the laser beam output energy cannot be stabilized as low as requested.

Solution:

Increase the EGY value (see Section 6.3.4 on page 138).

A0409LPX

9.1.23 ON:41 (ON:41)

The message ”ON:41“ appears on the handheld keypad as well as being sent through the serial interface to an external PC.

Reason:

In the Energy Constant Mode, the entered energy value exceeds the set value in the menu data by more than 5 %. The laser is in the ON mode.

Solution:

Enter a lower (valid) value.

9.1.24 Polling (OFF:6)

Reason:

At least one module in the laser device did not respond.

Solution:

Switch off the laser device and switch on again. If the problem remains, call Lambda Physik service.

9.1.25 Preset Energy too High (OFF:2; ON:2)

This message only occurs if the Running Mode is an Energy Constant Mode. It may be either a warning or an error message.

– Warning: the charging voltage has exceeded the threshold voltage HV_{repl}.

– Error message: the maximum possible voltage HV_{max} has been reached.

Reason (1):

The laser gas is of insufficient quality.

Solution:

Perform a New Fill (see Section 7.5.1 on page 168).

A0409LPX

Reason (2):

The EGY Const. value is too high. Consequently the HV limit has been reached.

Solution:

Reduce the EGY Const. value.
If the problem remains, follow the flowchart “Beam Energy too Low” (see Section 9.7 on page 278).

9.1.26 RAM Check Error (OFF:29)

This error message indicates incorrect menu data in the CI’s zero power RAM. The menu data can still be downloaded even in this failure scenario.

Reason:

RAM check failed. Communication interface or connections damaged.

Solution:

Call Lambda Physik service.

9.1.27 Timeout (OFF:31)

This error message appears if no data transfer has occurred through the RS232 serial interface within a period of one second.

Reason (1):

RS232 plug not properly connected.

Solution:

Check RS232 plug for proper connection.

Reason (2):

Control software failure.

Solution:

Switch the laser device off and then on again. Where necessary, program the remote PC with continuous requests to ensure that communication with the laser device through the serial interface is not interrupted.

Reason (3):

Communications interface damaged.

A0409LPX

Solution:

Call Lambda Physik service.

9.1.28 Warm-up 8min (OFF:21)

Reason:

Laser device has just been started and is now warming up the thyratron.

Solution:

Wait for eight minutes.

9.1.29 Wrong Pressure (OFF:27)

The laser tube pressure is out of range. The tube pressure must be within a range of ± 20% of the default tube pressure as specified in the Gas Menu.

Reason (1):

Pressure settings in the Gas Menu are too high or too low.

Solution

Reduce or increase settings in the gas menu so that the sum of all partial pressures does not deviate from the default pressure by more than ± 20 %

Reason (2):

Laser tube has a leak.

Solution:

Check the laser tube for leaks. If the leak cannot be sealed, call Lambda Physik service.

Reason (3):

Pressure detector on the laser tube defective.

Solution:

Call Lambda Physik service.

A0409LPX

9.2 Interlocks

An interlock refers to an error message indicating a malfunction or critical interference. The high voltage is switched off, but the laser device remains powered up. The advantages of this method are that the entire system does not need to be restarted when there is a simple malfunction and communication with the processor is still possible.

More than one interlock can occur at a time. To receive information about the current interlocks:

1. Press the function key <F1> on the handheld keypad.
2. Press <Cursor left> or <Cursor right> to select the interlock.
3. Press <ENTER>.



WARNING
Risk of electric shock!
Storage capacitors are charged with high voltage.
Never open the laser housing while high voltage capacitors are charged.
Measurements and work on the electrical system and its equipment shall only be carried out by a skilled electrician.

The following interlocks may occur:

– Overload (see Section 9.2.1 on page 272)
– Remote (see Section 9.2.2 on page 273)
– Temp.Res. (see Section 9.2.3 on page 273)
– Ventilation (see Section 9.2.4 on page 274)

9.2.1 Overload

This interlock is an electronic interlock for the HV power supply. It is activated if the high voltage charging circuit does not reach the preset high voltage level.

Reason (1):

Thyratron no longer adjusted.

Solution:

Adjust the thyratron settings (see Section 7.9 on page 205).

Reason (2):

Malfunction in the HV circuit.

A0409LPX

Solution:

Switch the laser device off and then on again. If the problem remains, call Lambda Physik service.

9.2.2 Remote

An externally connected safety switch (e.g. door switch) connected to the 4-pin remote socket (see Section 4.7.1 on page 78) or one of the interlocked access panels is open.

Reason (1):

Externally connected safety switch open.

Solution:

Close contact between pins 2 and 3 of the remote socket.

Reason (2):

One of the laser device service panels is open.

Solution:

Close all service panels (see Section 7.3.2.1 on page 153).

9.2.3 Temp.Res.

This interlock is a thermal switch which is located on top of the laser tube. The switch opens if the laser tube temperature reaches 46 °C.

Reason:

There insufficient cooling water flow, no cooling water or the cooling water is too warm.

Solutions:

1. Ensure that water flow matches the specifications (see Section 4.5 on page 76).
2. Ensure that the water inlet temperature is within range of specifications (see Section 4.5 on page 76).
3. Check that the cooling water is turned on and that there is no water leak. If the problem remains, call Lambda Physik service.

A0409LPX

9.2.4 Ventilation

The motor which drives the gas circulation fan in the laser tube is protected by this interlock.

Reason (1):

Malfunction of the gas circulation fan motor.

Solutions:

1. Ensure that the motor is electrically connected.
2. Ensure that the fan motor is not damaged. If the problem remains, call Lambda Physik service.

Reason (2):

Damaged fan or fan bearings.

Solution:

Call Lambda Physik service.

A0409LPX

9.3 Self-Firing

The laser fires a light pulse without receiving a trigger pulse.

Reason (1):

Incorrect thyratron settings.

Solution:

Adjust the thyratron (see Section 7.9 on page 205).

Reason (2):

Thyratron, varistor or trigger board defective.

Solution:

Call Lambda Physik service.

9.4 No Trigger Signal

This malfunction causes the error message “LOW LIGHT” (see Section 9.8 on page 283).

A0409LPX

9.5 Corrosion in Gas System

Symptom:

– Insufficient gas lifetime,

– Beam specifications not reached,

– Visible corrosion at gas lines and connections.

Reason (1):

The halogen line was not purged prior to a standstill. Consequently, halogen has come in contact with ambient humidity

Solution:

Replace the corroded lines.

Reason (2):

Halogen line was been purged prior to a standstill, but the halogen gas cylinder was not sealed properly.

Solutions:

1. Check the pressure regulator in halogen line.
2. Check the valve on the halogen gas cylinder.
3. Replace the corroded lines and pressure regulators.

A0409LPX

9.6 Laser Device Does Not Start

Symptom:

After turning on the laser device with the mains and the key switches, nothing happens (lamps do not light, no sound).

Reason (1):

Mains supply line not properly connected or defective.

Solution:



WARNING
Risk of electric shock!
The mains supply line shall only be replaced by a skilled electrician or by instructed persons under the supervision and guidance of a skilled electrician and in accordance with electrical engineering rules and regulations..

Check and, if necessary, replace the mains supply line.

Reason (2):

Incorrect main supply voltage and frequency.

Solution:

Check that the laser device is set to the correct mains supply voltage and frequency.

A0409LPX

Reason (3):

Defective fuse(s).

Solution:

Check the fuses and, if necessary, replace any defective fuses (see Section 9.9 on page 288)

Reason (4):

No line voltage.

Solution:

Check the appropriate fuses in the building.

9.7 Beam Energy Too Low

The pulse energy may be low for many different reasons. To clearly detect the source of the problem, follow the flowcharts shown on the following pages.

A0409LPX

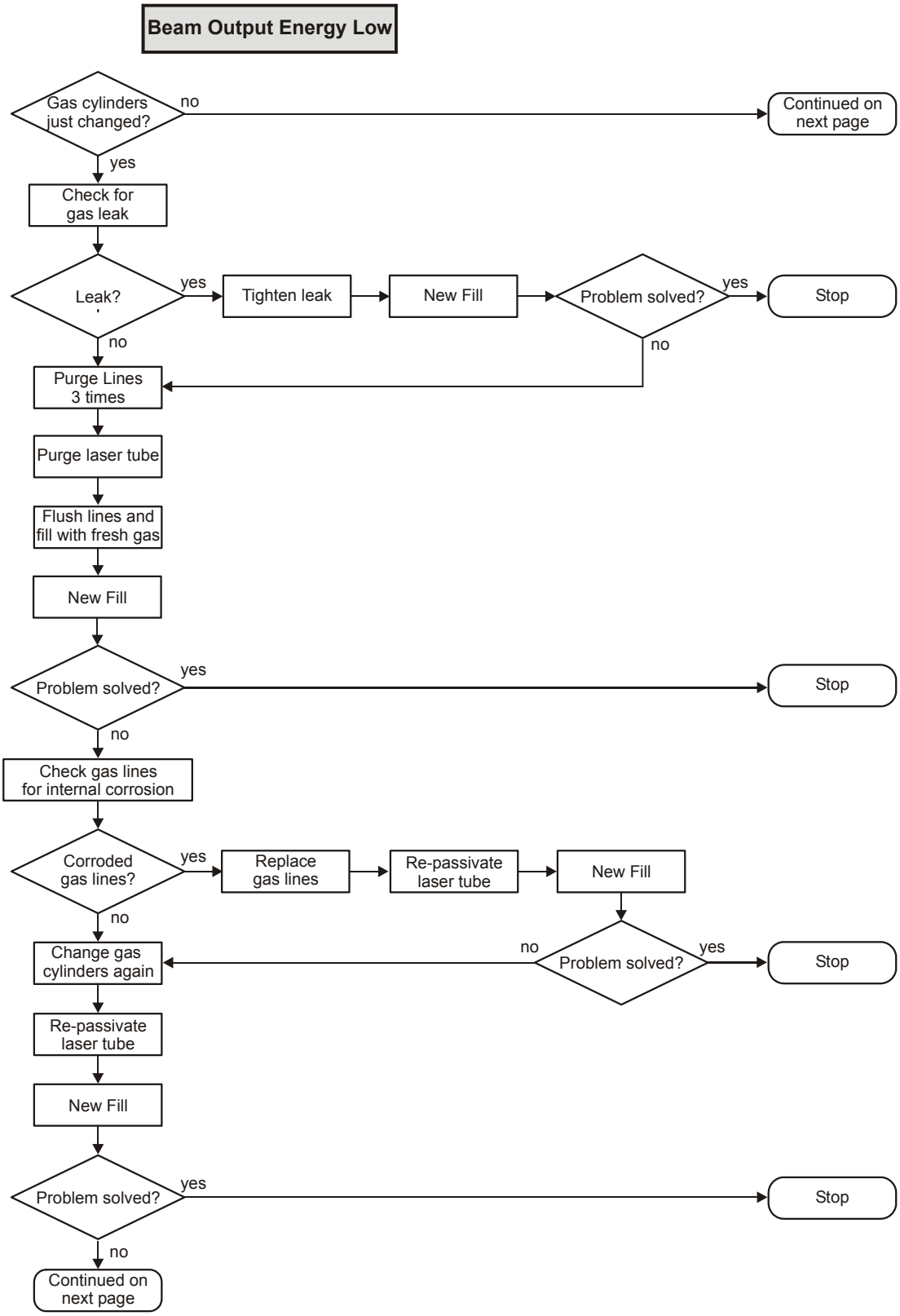

A0409LPX

Figure 107: *Beam energy too low - part 1*

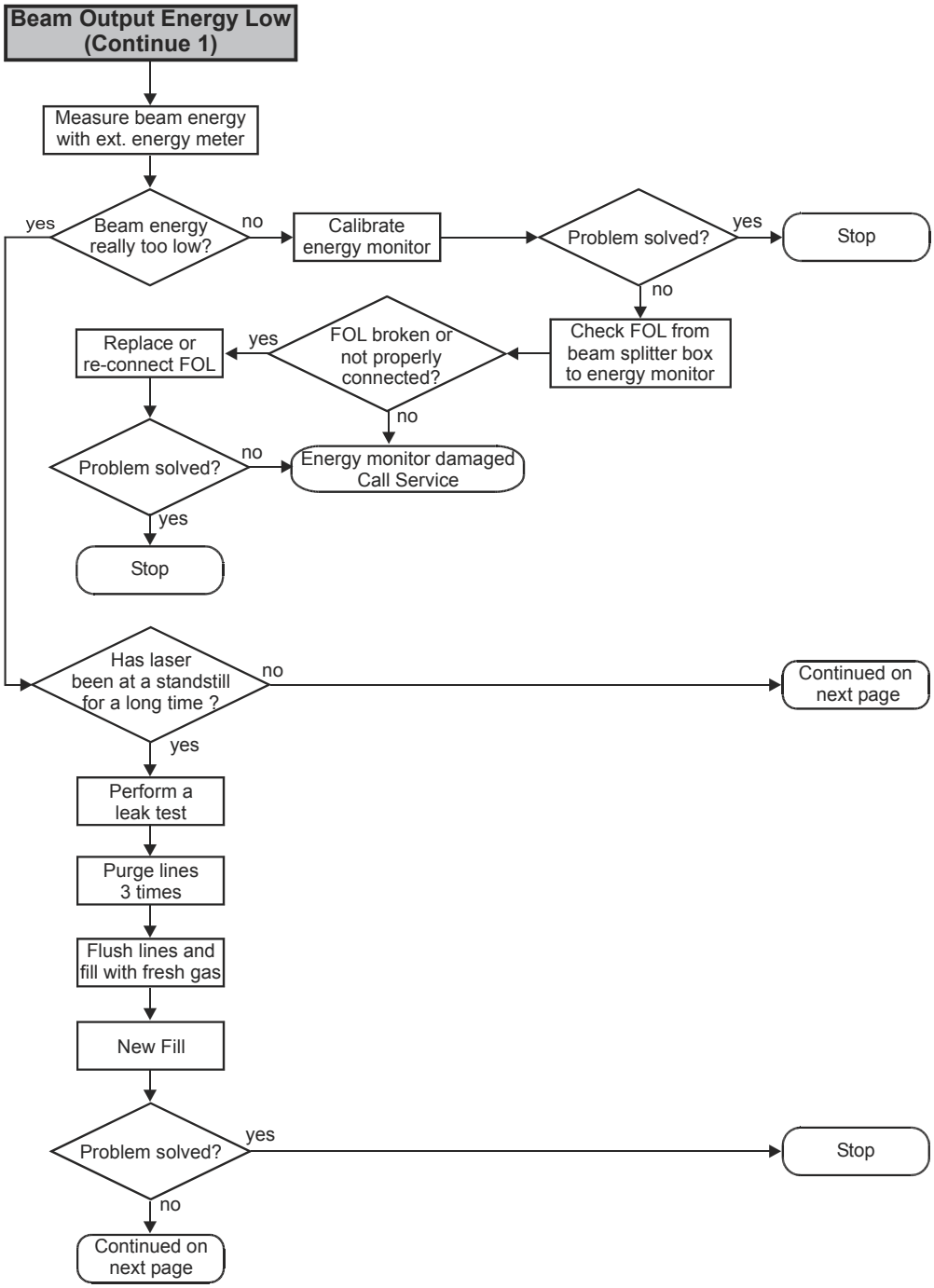

Figure 108: *Beam energy too low - part 2*

A0409LPX

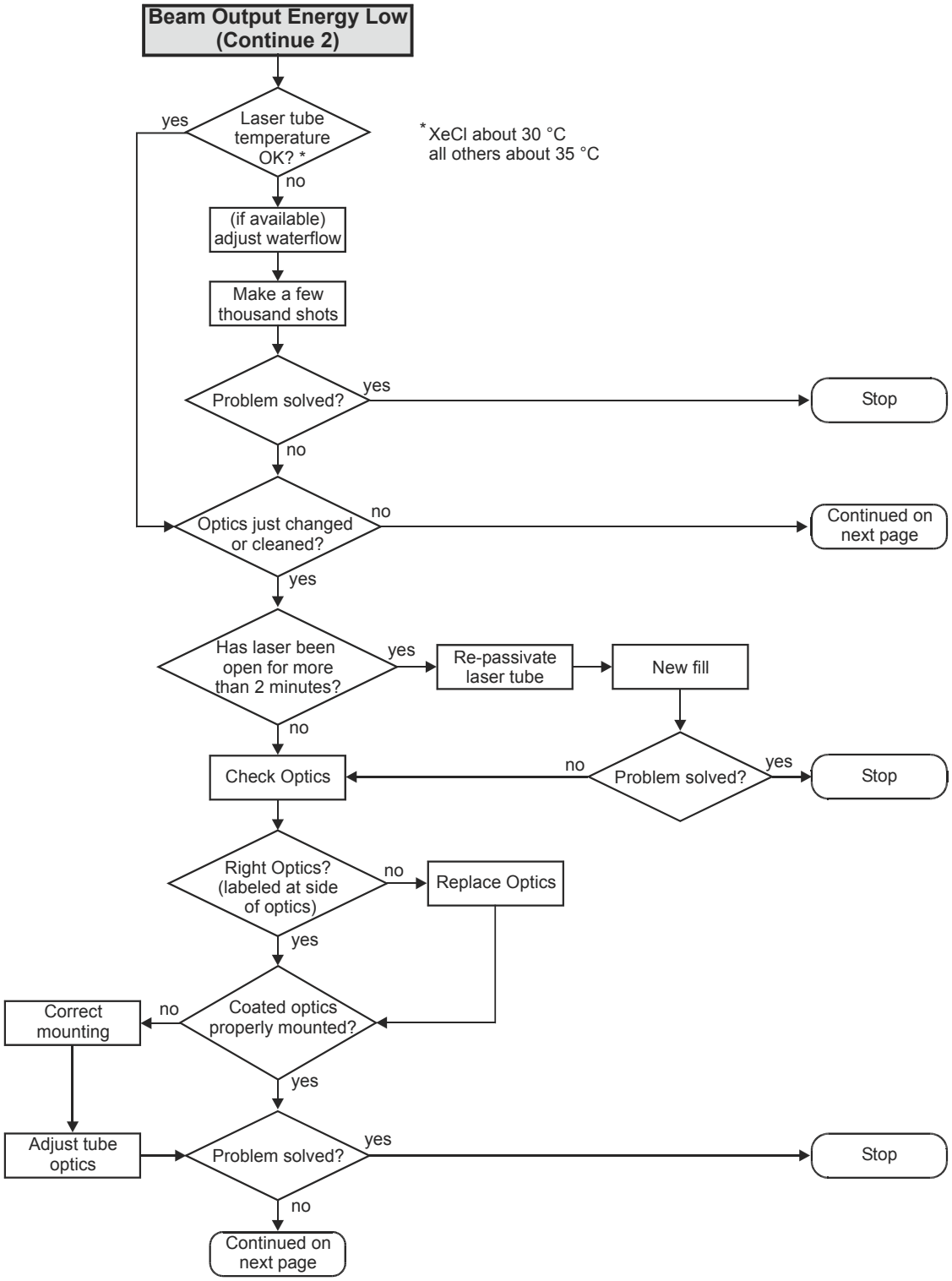

A0409LPX

Figure 109: *Beam energy too low - part 3*

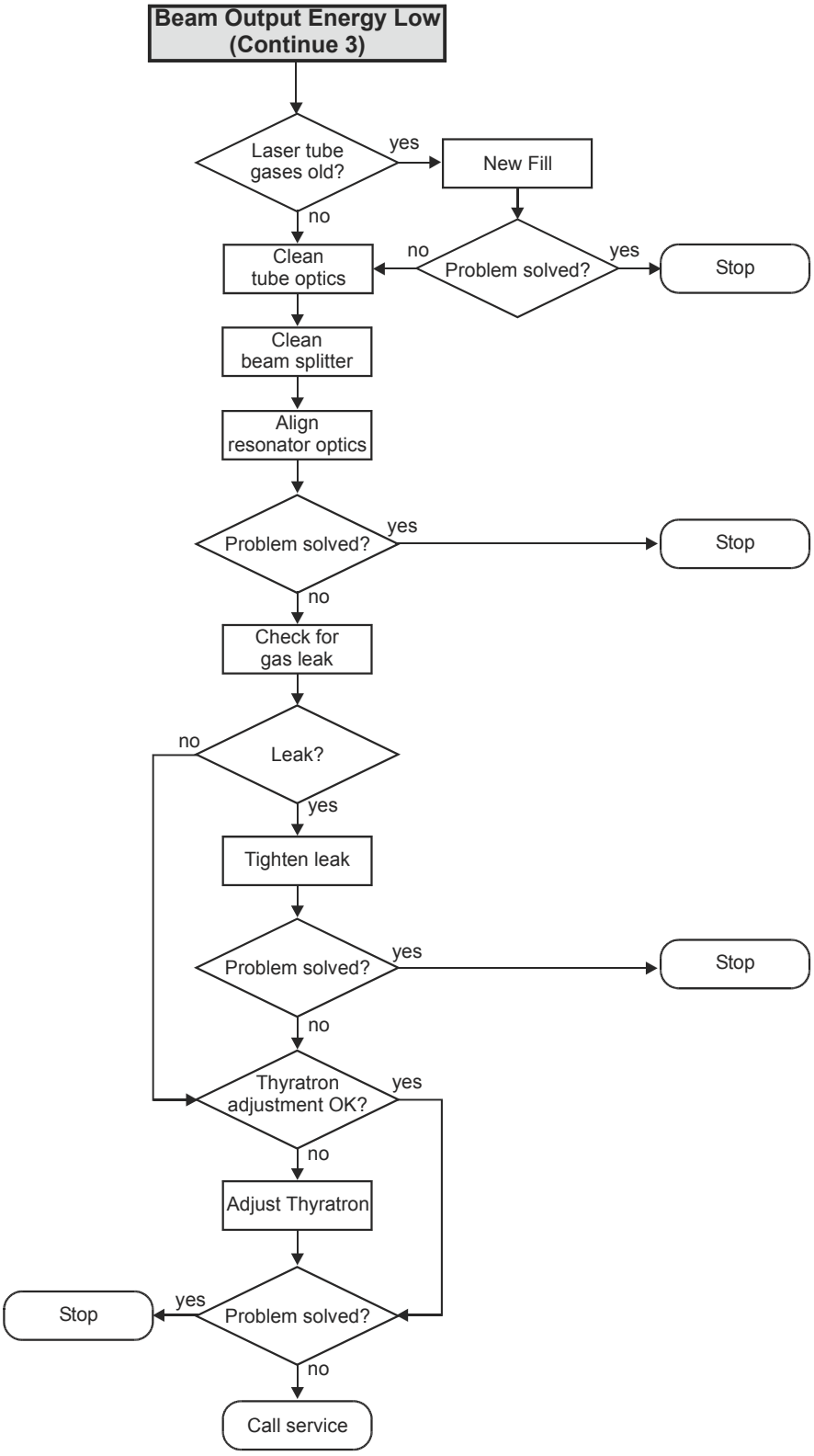

A0409LPX

Figure 110: *Beam energy too low - part 4*

9.8 Low Light

The low light error my occur for several reasons. To clearly detect the source of the problem, follow the flowcharts shown on the following pages.

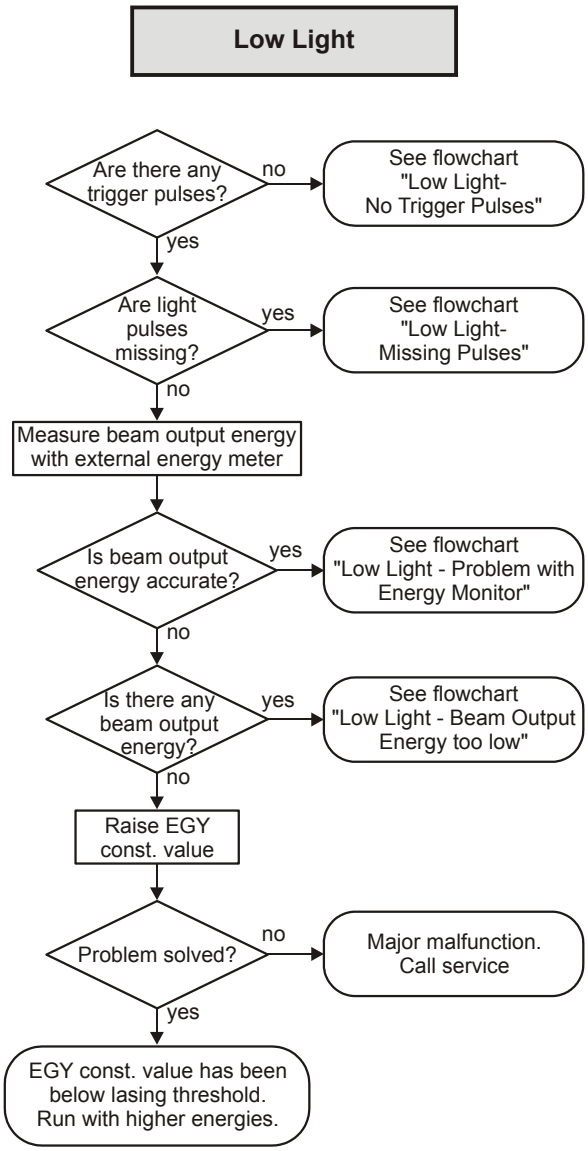

Figure 111: *Low Light*

A0409LPX

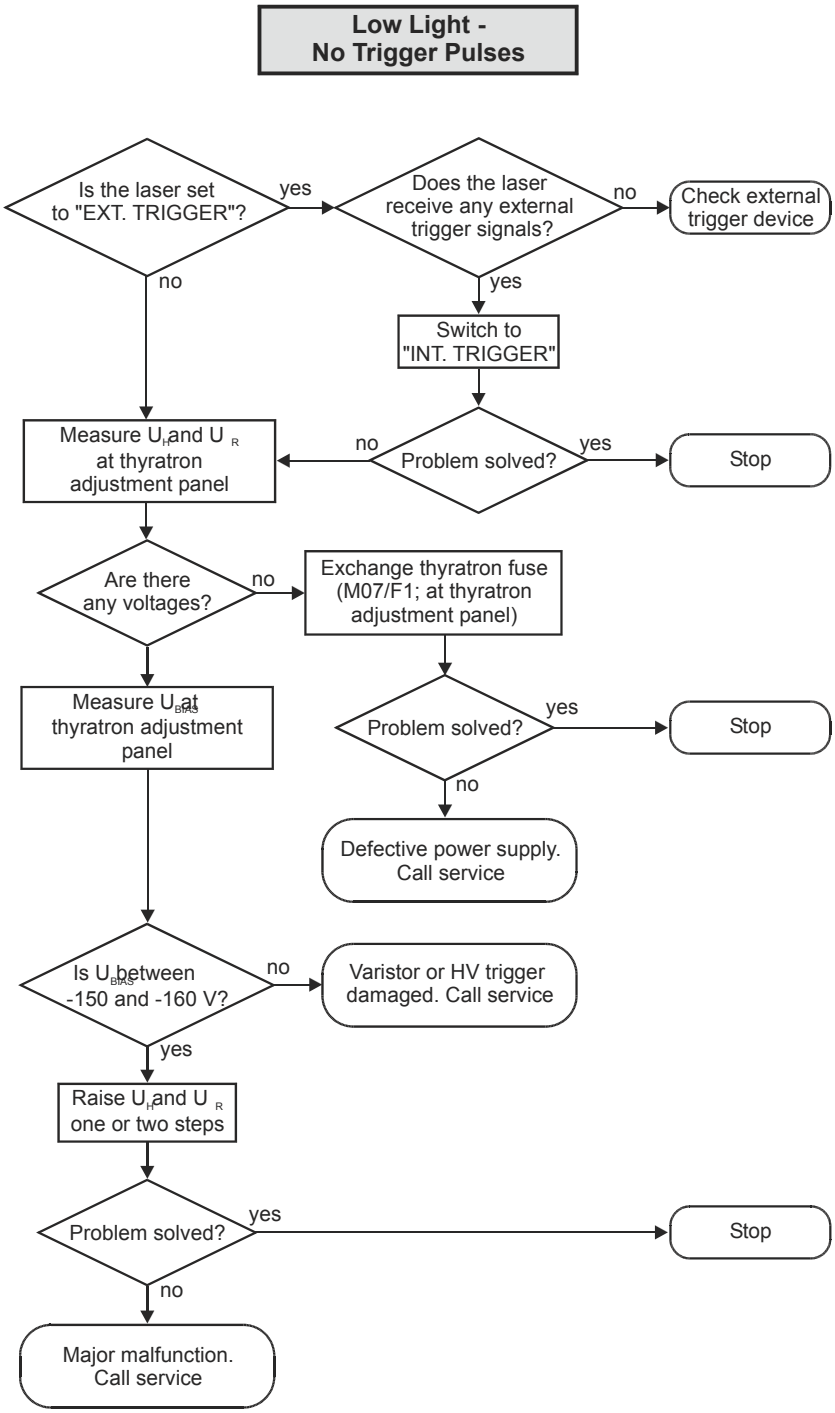

Figure 112: *Low Light - no trigger pulses*

A0409LPX

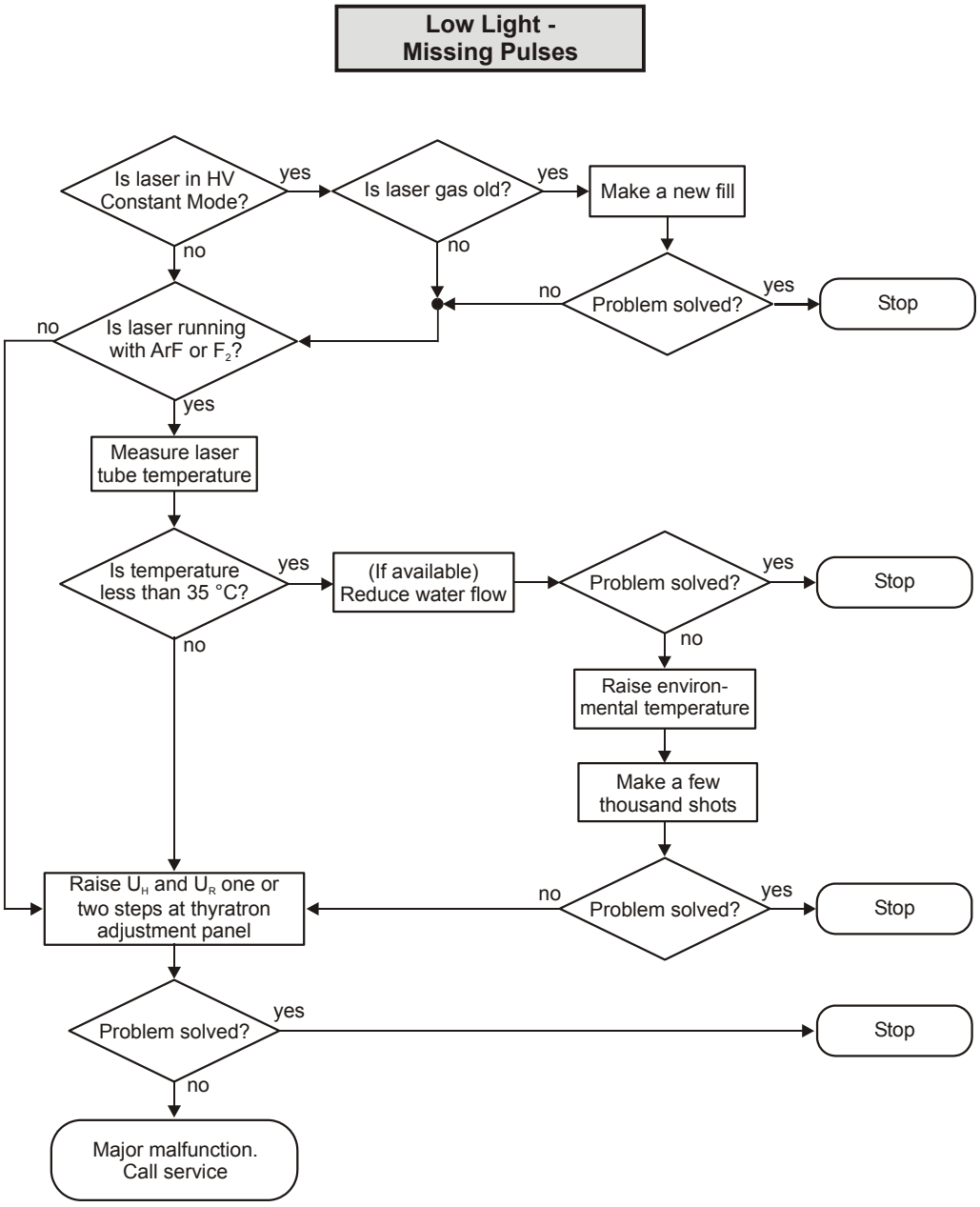

Figure 113: *Low Light - missing pulses*

A0409LPX

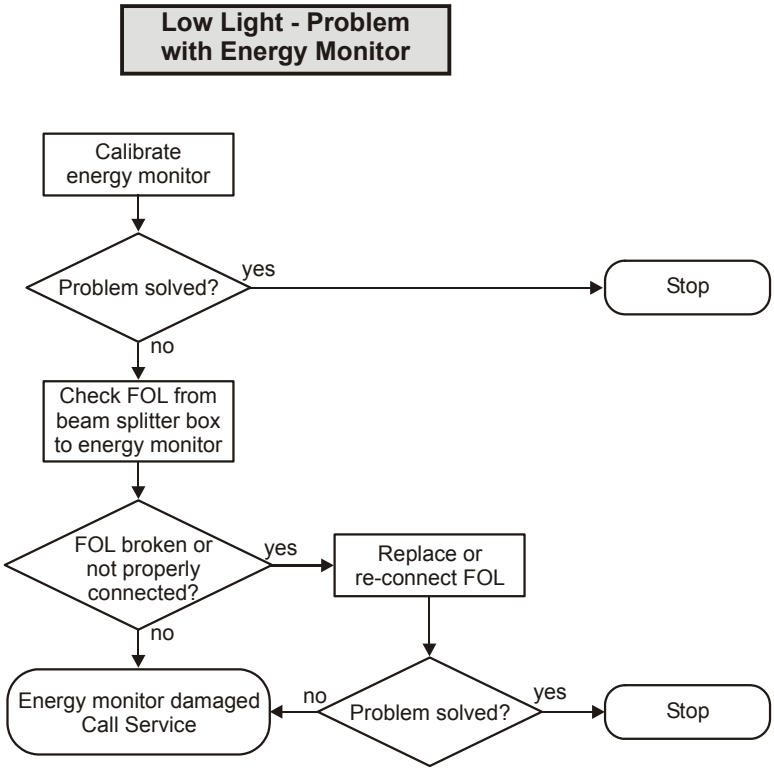

Figure 114: *Low Light - problem with energy monitor*

A0409LPX

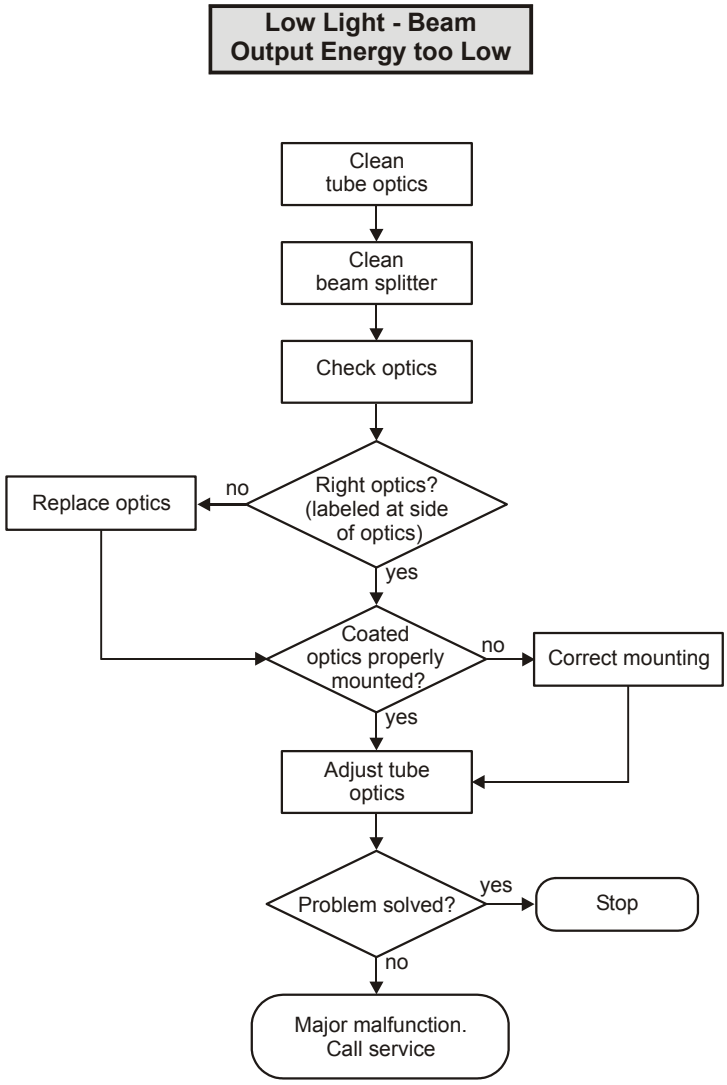

Figure 115: *Low Light - beam energy too low*

A0409LPX

9.9 Fuses

The user-servicable fuses of the LPX*Pro* are located on the rear panel of the laser head and on the connection side of the HV power supply module.

9.9.1 Laser Head Fuses

The exact location of the fuses on the rear panel of the LPX*Pro* is indicated in Figure 116. The type and purpose of the fuses are described in the table below.

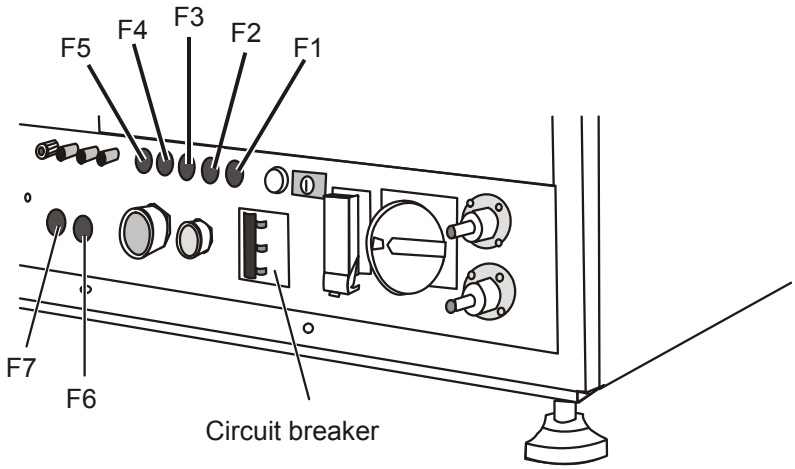

Figure 116: *Location of fuses on laser head*

Fuse	Value 208 V	Value 380 V	Protection
Circuit breaker	-	-	3-phase main fuse for the complete laser device
F1	4.0 A ultra-slow blow	4.0 A ultra-slow blow	Main fuse for control circuit
F2	4.0 A ultra-slow blow	-	Additional fuse for control circuit (only required for 208 V)
F3	10 A slow blow	6.3 A slow blow	Vacuum pump, gas circulation fan (L1)
F4	10 A slow blow	6.3 A slow blow	Vacuum pump, gas circulation fan (L2)
F5	10 A slow blow	6.3 A slow blow	Vacuum pump, gas circulation fan (L3)
F6	2.5 A ultra slow blow	2.5 A ultra slow blow	Control circuit for energy monitor, interlock module, gas handling module
F7	2.5 A slow blow	2.5 A slow blow	Control circuit for gas processor, oil pump, exhaust fan, discharge unit

A0409LPX

9.9.2 HV Power Supply Module Fuses

The fuses are located on the connection panel of the HV power supply module. Depending on the configuration of the HV power supply module, the cable plate or outer cover may have to be removed to gain access to the fuses. Each fuse is clearly marked on the device. The type and purpose of the fuses are described in the table below.

Fuse	Value 208 V	Value 380 V	Protection
F1	-	-	Mains power circuit of HV power supply module
F2	0.315 A slow blow	0.315 A slow blow	Control circuit of the HV power supply module
F3	0.315 A slow blow	0.315 A slow blow	Control circuit of the HV power supply module

A0409LPX

A0409LPX

10 GLOSSARY

This chapter explains laser vocabulary used throughout this manual.

Beam Splitter

Laser optics which divide a beam into two separate beams through reflection and transmittance. On the LPX*Pro*, a beam splitter deflects a part of the beam onto the Energy Monitor. Some beam splitters have an UV coating. This allows a minimum of beam energy loss with a maximum of reflection and transmission. Beam splitters may also act as a filter to allow transmittance of only a small range of wavelengths.

Buffer

Gas that provides optimum discharge abilities for the laser gas. Neon as a buffer is a patent of Lambda Physik (US Patent # 4,393,505).

Cavity Windows

See *Windows*.

Communication Interface

The central control unit of the LPX*Pro*. It contains the laser control software for the laser. Abbreviation CI.

Data Ring

Information link for the modules in the laser device. All laser modules are connected in series and are constantly polled to watch their function. The data ring is made up of *FOL*s.

Discharge Capacitors

See *Peaking Capacitors*.

EGY

Abbreviation for *Energy*.

EGY CONST

Abbreviation for *Energy Constant Mode*.

Energy Constant Mode (EGY CONST)

Running Mode, that keeps the beam energy constant by continuously increasing the HV. If a given threshold HV is reached, the laser reacts with an HI or PGR or a warning, depending on the Energy Constant Mode chosen (see Section 2.7 on page 32).

Energy Monitor

Tool to measure the energy of the laser beam via a detector. Fed by a beam splitter, that reflects 10% of the beam energy onto the detector. The energy monitor electronics convert the light intensity into an 8-bit signal, that is evaluated by the Communication Interface.

The Energy Monitor is triggered with a FOL line from the beam splitter box to theenergy monitor electronics. If there is laser light within the beam splitter box, the FOL line leads a light pulse to the energy monitor electronics causing it to function. Thus it does not detect continuously but is triggered by the beam light itself.

Excimer

Abbreviation for *Excit*ed State D*imer*
A short-lived diatomic molecule, composed of an excited and a non-excited atom. In an Excimer laser it is created by a high voltage discharge. When decomposing, the excimer gas emits the laser radiation.

Flushing

Evacuating a gas line.

Flushing Procedure

Procedure to allow optics replacement and optics cleaning.

FOL

Abbreviation for Fiber Optics Light Wave Guide. Information link, that transmits via light signals. Used in excimer lasers to keep the information links free of electrical interference.
In some cases, the LPX*Pro* software uses the german abbreviation “LWL” (for Lichtwellenleiter).

A0409LPX

FWHM

Abbreviation for Full Width Half Maximum. The width of a graph measured at 50% of the peak transmission (see Figure 117).

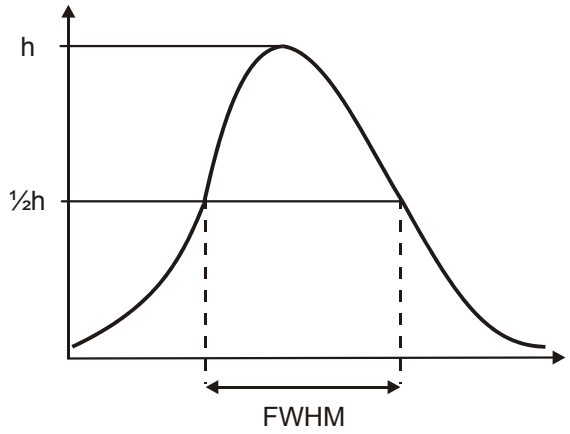

Figure 117: *Full Width Half Maximum (FWHM)*

Gas Handling Module

A module in the data ring that controls gas actions and the tube pressure. It is controlled by the communication interface.

Gas Lifetime

– Dynamic Gas Lifetime
  Lifetime of the gas in the laser tube with respect to operation. Specified as the number of pulses it takes for the beam energy to decrease from max. value (after new gas fill) to half output energy (50%). To test this the laser operates at maximum repetition rate with no interruption and max. high voltage. Neither Halogen Injections nor any other gas actions are performed.

– Static Gas Lifetime
  Lifetime of the gas in the laser tube while non-operation. Specified as the time it takes for the beam energy to decrease from maximum value (after a new gas fill) to half energy (50%). To test this, the laser operates at maximum repetition rate with no interruption and maximum possible high voltage, but only for one minute a day. Neither Halogen Injections nor any other gas actions are performed. The decline in output from one day to the next is measured.

Gas Menu

A data file included with the communication interface. It contains information about actual and default partial pressures of the gases, allowed partial pressure ranges, default repetition rate and HV threshold settings.

A0409LPX

Halogen

In excimer lasers, either fluorine (F) or hydrogen chloride (HCl).

Halogen Injection

Injects a single flash of halogen gas into the laser tube. Afterward the beam energy must stabilize again. Hence, there are increased pulse-to-pulse energy fluctuations for a while. Serves to increase the gas lifetime (see Section 2.7.2.1 on page 33).

Halogen Source

The Lambda Physik HaloSafe®. A safe way to provide halogen gas. Eliminates the need for handling toxic halogen gas outside the laser device. Halogen is only provided if needed. The halogen source is available as an option.

Handheld Keypad

A keypad specially designed to make laser operations more comfortable. It provides control over all necessary laser functions.

HI

Abbreviation for *Halogen Injection*.

HV

Abbreviation for *High Voltage*.

HV Constant Mode (HV CONST)

Running Mode that keeps the charging current constant. This means that the beam energy will slowly decrease during operation until the next New Fill (see Section 2.7 on page 32).

HV_{repl}

See *Treshold Voltage*.

Inert

Gas, that does not react with any other substances. Normally helium.

Interlock

A safety feature that occurs in case of a laser malfunction, switching the laser into a safe state (normally off). LPX*Pro* laser devices are equipped with hardware and software interlocks. Hardware interlocks are mechanically realized by switches. Software interlocks are activated when a predefined limit value is exceeded.

A0409LPX

Laser

Abbreviation for Light Amplification by Stimulated Emission of Radiation. According to ISO 11 145 “laser” means the lasing unit itself (see also *Laser Device*).

Laser Device

According to ISO 11 145 the “laser device” includes the laser and its supply unit (power supply, cooling supply, etc.); see also *Laser*.

Laser Tube

The laser tube (NovaTube®) is the reservoir for the *excimer laser gas*. Together with the *mirrors*, it constitutes the *resonator*.

Local Software

The software of the *communication interface* that enables operation with the *handheld keypad*.

Mirrors

Mirrors are the part of the laser optics, that constitute the resonator. The rear mirror is a highly reflective mirror, the front mirror is translucent, thus acting as an output coupler. In most cases it has a dielectric coating depending on the operating wavelength of the laser.

New Fill

Evacuates the laser tube and refills it with fresh gases according to the settings in the Gas Menu.

NGR

Abbreviation for No Gas Replacement.

No Gas Replacement (EGY NGR)

No Gas Replacement is a Running Mode of LPX*Pro* laser devices, where the laser control keeps the beam energy constant. If the threshold voltage HV_{repl} is exceeded, the software reacts with a warning. If it exceeds HV_{max}, the laser is switched off and gives an error message (see Section 2.7.3 on page 35)

OPMODE

Abbreviation for *Operating Mode* in the laser control software. All executable commands are called OPMODEs and are executed with this command.

A0409LPX

Passivation

Process that makes the surface of the laser tube chemically inert to a halogen gas. During this process halogen gas reacts with the surface of the tube building up a layer of a halogen-metal complex. The layer is inert to one specific halogen but not to water, oxygen or other molecules. Thus it can be destroyed by humidity or other impurities that enter the tube. In this case the tube must be repassivated.

A full passivation is required when the halogen gas has been changed (chlorine to fluorine and vice versa). A full passivation can only be performed by service personnel.

Partial Gas Replacement (EGY PGR)

Partial Gas Replacement is a running mode of the LPX*Pro*™ Series, where the laser control keeps the beam energy constant. If the threshold voltage HV_{repl} is exceeded and a fixed number of Halogen Injections were not successful, a part of the gas in the laser tube is removed and replaced with fresh gas. Afterward, the beam energy must stabilize again. Consequently, there is a period with increased pulse-to-pulse energy fluctuations for a while (see Section 2.7.2.2 on page 34).

Partial Pressure

In a gaseous mixture, the pressure exerted by a single component is its partial pressure. The sum of all partial pressure of the mixture equals the pressure of the mixture.

Peaking capacitors

The discharge of an excimer laser is fed from discharge capacitors (“peaking capacitors”). These discrete ceramic high-voltage capacitors are coupled directly with the discharge electrodes with minimum inductance. The peaking capacitors are charged by a current pulse supplied by the storage capacitors.

PGR

Abbreviation for *Partial Gas Replacement*.

Premix

Predetermined mixture of the laser gases or its components.

Purging

Cleaning gas lines or the laser tube with inert gas.

Rare

One of the components of the excimer gas. Depending on the gas mixture it can be argon, krypton or xenon.

A0409LPX

Remote Control

The control mode in which an external PC is connected to the *communication interface* through the serial interface (instead of the *handheld keypad*).

Repetition Rate

The number of beam pulses per second. Unit is Hz [1/s].

Reservoir

The hydrogen reservoir of the thyratron. It provides the necessary hydrogen for thyratron operation.

Resonator

The optical resonator is formed using two mirrors. The mirrors are arranged on opposite sides of the laser medium (the gas), thus providing the necessary feedback for the laser oscillator. The LPX*Pro* has an external resonator configuration, i.e. the mirrors are separated from the laser tube. This ensures stable laser performance as the resonator mirrors are not affected by temperature or pressure effects inside the laser tube.

RS 232 C

An industry standard for serial communications connections. Adopted by the Electrical Industries Association, this Recommended Standard (RS) defines the specific lines and signal characteristics used by serial communications controllers to standardize the transmission of serial data between devices. The letter C denotes the current version of the standard.

Safety Fill

A safety feature of the LPX*Pro*. A Safety Fill is performed if the laser tube could not be evacuated to 30 mbar (due to e.g. a Gas Leak or a defective vacuum pump). Fills the laser tube with inert gas, thus bringing it to a safe condition.

SlideValve

The SlideValves are the optics holders mounted on each side of the laser tube. They seal the laser tube to prevent ambient room air from entering the tube while removing and inserting the windows (see Section 7.6.1 on page 176)

Threshold Voltage

In Energy Constant Mode the charging voltage is steadily increased to keep the beam energy constant. The Threshold Voltage HVrepl is a limit value at which the LPX*Pro* reacts to this increase. The reaction may be a warning (in EGY NGR), an HI (in EGY PGR) or a PGR (also EGY PGR after a number of unsuccessful HIs).

Thyratron

Fast, high voltage switch to discharge the storage capacitors as a reaction to a trigger signal. A hydrogen-filled ionization tube. For details see Section 2.4.4.2 on page 23.

Trigger Pulse

A signal that causes the laser to fire a single beam pulse.

UV

Abbreviation for *Ultraviolet Light*. The portion of the electromagnetic spectrum between 200 and 400 nm. A special part of the UV range is the VUV range (see VUV).

VUV

Abbreviation for Vacuum Ultraviolet Light. The portion of the electromagnetic spectrum between 100 and 200 nm. At these very short wavelengths, air becomes opaque; hence, experiments must be performed in a vacuum (or inert gas).

Watchdog

A switch that alters its logical level when the reset pulses stop. All watchdogs are reset at least three times a second. If the reset fails, a breakdown is assumed. The module concerned is switched to a safe, in-active state. The gas handling module is monitored by a watchdog.

Windows

The windows (cavity windows) seal the gas volume of the *laser tube* . For ease of maintenance, each window is mounted in a *SlideValve*.

LIST OF FIGURES

Figure 1: Laser components according to ISO 11145 6
Figure 2: Laser principle 10
Figure 3: Functional design of the LPX*Pro* laser device 11
Figure 4: Principal Modules of the LPX*Pro* laser device 12
Figure 5: View of front, right-hand side and top of laser head . . 13
Figure 6: View of rear and left-hand side of laser head 14
Figure 7: Laser head without service panels, top cover and right side panel 15
Figure 8: View of front service area 16
Figure 9: View of rear service area 17
Figure 10: Handheld keypad 18
Figure 11: Cutaway drawing of the laser tube 19
Figure 12: Laser resonator and energy monitor 21
Figure 13: Layout of the high voltage circuit 22
Figure 14: Laser control system with handheld keypad 24
Figure 15: Laser gas supply / exhaust without halogen source . . 26
Figure 16: Laser gas supply / exhaust with fluorine source 28
Figure 17: Cooling water circuit 29
Figure 18: Pulse energy as a function of charging voltage 32
Figure 19: Voltage increase in the Energy Constant mode 32
Figure 20: Energy decrease in the HV Constant mode 33
Figure 21: Charging current with halogen injections 34
Figure 22: Charging current with Partial Gas Replacement 34
Figure 23: Charging current with No Gas Replacement (NGR) . . 35
Figure 24: Operating mode transition diagram 35
Figure 25: Laser radiation warning light and shutter 56
Figure 26: Main switch with EMO function 57
Figure 27: Mains voltage warning light and key switch 60
Figure 28: Safety labels on rear of LPX*Pro* laser head 62
Figure 29: Safety labels on front and inside of LPX*Pro* laser head 63
Figure 30: Safety labels on PU3000P HV power supply module . 65

Figure 31: Dimensions of laser head (top) 70
Figure 32: Dimensions of laser head (side) 70
Figure 33: Dimensions of laser head (rear) 71
Figure 34: Dimensions of laser head (front) 71
Figure 35: Remote Socket 78
Figure 36: Beam exit position 81
Figure 37: Foot configuration 82
Figure 38: Foot location 82
Figure 39: Gas connections 83
Figure 40: Cooling water connections 84
Figure 41: Electrical and signal line connections 85
Figure 42: Location of air intake and exhaust 86
Figure 43: Maintenance / service area 87
Figure 44: Connecting water lines to the laser head 91
Figure 45: Plugging-in the 10 pin socket 94
Figure 46: Connecting HV power supply FOL links 94
Figure 47: Mounting the cable plate 95
Figure 48: Removing the grounding cable plug 95
Figure 49: HV power supply module with all connections in place 96
Figure 50: Electrically connecting the vacuum pump 97
Figure 51: Connecting RS 232 to laser head 98
Figure 52: Connecting RS232 to Handheld keypad 99
Figure 53: Remote circuit 100
Figure 54: Laser tube exhaust line connection 104
Figure 55: Removing plug from vacuum pump 105
Figure 56: Fitting the Gyrolok® Connector 108
Figure 57: Tightening the Gyrolok® Connector 108
Figure 58: Operating elements on laser head 112
Figure 59: Laser radiation warning lamp 114
Figure 60: handheld keypad 115
Figure 61: Status and parameter settings display 116
Figure 62: Closing pressure regulator 126
Figure 63: Opening gas cylinder valve 126

A0409LPX

Figure 64: Setting pressure regulator to required pressure 127
Figure 65: Switching on the laser device 129
Figure 66: Opening the beam shutter 131
Figure 67: RUN / STOP key on the keypad 131
Figure 68: BREAK key on the keypad 132
Figure 69: Switching off the laser device 133
Figure 70: Shutting down the gas supply 134
Figure 71: Main switch lockout 150
Figure 72: Discharging the capacitors 151
Figure 73: Laser head service panels 153
Figure 74: Laser head front, side and top covers 154
Figure 75: Optics coatings 175
Figure 76: Operating principle of the SlideValve 176
Figure 77: Front SlideValve 178
Figure 78: Opening the SlideValve 179
Figure 79: SlideValve opened 179
Figure 80: Removing the tube window mount 180
Figure 81: Inserting the premounted window 180
Figure 82: Optics cleaning materials 182
Figure 83: Unscrewing the optic retaining ring 183
Figure 84: Removing the optic retaining ring 184
Figure 85: Removing the optic 184
Figure 86: Cleaning the uncoated side of the window 186
Figure 87: Inserting the window 187
Figure 88: Removing the energy monitor 188
Figure 89: Loosening the front mirror mount fastening screws . . 189
Figure 90: Exchanging the front mirror mount 189
Figure 91: Loosening the rear mirror mount fastening screws . . 190
Figure 92: Removing the screws from the optic mount 192
Figure 93: Removing the mirror from the optic mount 192
Figure 94: Removing top plate of beam splitter unit 196
Figure 95: Top plate of beam splitter unit 197
Figure 96: Inserting the beam splitter top plate 198
Figure 97: Direct alignment laser through laser cavity 203

Figure 98: Direct alignment laser through alignment pucks 203
Figure 99: Reflection of alignment laser on card . . . . . (alignment necessary) 204
Figure 100: Reflection of alignment laser on card (optics aligned) 204
Figure 101: Measuring thyratron heating voltage 206
Figure 102: Measuring reservoir heating voltage 207
Figure 103: Thyratron supply voltage adjustment 208
Figure 104: Location of halogen filter below rear service panel . . 211
Figure 105: Exchanging the halogen filter 212
Figure 106: Calibrating the energy monitor 233
Figure 107: Beam energy too low - part 1 279
Figure 108: Beam energy too low - part 2 280
Figure 109: Beam energy too low - part 3 281
Figure 110: Beam energy too low - part 4 282
Figure 111: Low Light 283
Figure 112: Low Light - no trigger pulses 284
Figure 113: Low Light - missing pulses 285
Figure 114: Low Light - problem with energy monitor 286
Figure 115: Low Light - beam energy too low 287
Figure 116: Location of fuses on laser head 288
Figure 117: Full Width Half Maximum (FWHM) 293

A0409LPX

INDEX

Numerics

24 V DC power supply 25

A

Active laser medium 9
Additional pulses 208
Adjustment range of feet 82
Air intake
  Location 86
  Specifications 77
Argon 73
Asbestos 51, 60

B

Beam energy too low 278
Beam exit position 81
Beam output energy setting 138
Beam splitter
  Cleaning 199
  Exchange 195
  Location 16
  Purpose 21
Blanks
  Use of in remote commands 219
BREAK key 117
Buffer gas cylinder
  Exchange 163

C

Carriage Return character
  Meaning in commands 219
Charging voltage setting 139
Check valve
  Cooling system 29
CI
  see Comminication interface
Circulation fan 20
Class I laser device
  Definition 44
Class IV (high power) laser device
  Definition 44
Coatings of optics 175
Comma
  Meaning in commands 219

A0409LPX

Communication interface 24, 114, 291
Location 17
Remote software 217
Constructive safety features 55
Cooling water
Circuit 29
Connections 84
Specifications 76
COUNTS RESET key 120
COUNTS SEL key 120
Cursor keys
Handheld keypad 117

D

Data ring
Purpose 291
Selftest 30
Designated use of laser device 40
Dimensions 70
Diode adjustment laser 201
Discharge capacitors 291
Display
Handheld keypad 116
Display elements 112
Door switches 31
Dynamic gas lifetimes 293

E

EGY CAL key 120
EGY CONST 291
EGY key 119
EGY NGR mode 137
EGY PGR mode 137
Electrical connection
Location 85
Specifications 75
Electrical hazards 42
Electrical line installation 92
Electrical safety features 57
Emergency gas fill 145
Emergency OFF (EMO)
Activation of switch 144
Main switch function 113
Use of EMO switch 52
Enable key switch 113
Energy Constant mode 32, 125, 292
Energy efficiency 20
Energy management mode 137

A0409LPX

Energy monitor
Calibration 193
Description 21
Function 292
Location 16
Maintenance 193
Purpose 11
Energy setting 138
ENTER key
Handheld keypad 117
Environmental conditions 88
Equals sign
Meaning in commands 219
Excimer
Meaning of expression 9, 292
Excimer laser gases
Turning off 134
Excited state dimer 292
EXE (Execute) key 117
Exhaust
Installation of line 102
Location of connection 86
Specifications 77
External interlock switches 78, 99
External laser radiation warning lamp 31, 78, 99
External resonator optics
Exchange 187, 191
External triggering 31, 80

F

FDA radiation performance standards 64
Fiber optics light wave guide (FOL) 292
Fire safety
Features 59
Guidelines 51
Flammable substances 51
Flow regulating valve
Cooling system 29
Flow sensor
Cooling system 29
Fluorine 73
Flush gas line procedure 155
FLUSH LINE key 122
Foot
Adjustment range 82
Configuration 82
Front service panel
Handling 153
Location 13
Front shutter panel
Location 13
Full width half maximum (FWHM) 293

A0409LPX

Function keys
Handheld keypad 121
Fuses
HV power supply module 289
Laser head 288

G

Gas cabinets 84
Gas connections 83
Gas cylinders
Remaining pressure 72
Safety precautions 124
Gas handling module
Location 17
Gas handling safety features 58
GAS keys 122
Gas leaks
Minimizing risk 124
Gas lifetime
Dynamic 293
Static 293
Gas lines
Connection 106
Disconnection 215
Flushing 155
Purging 156
Gas menu
Purpose 293
Resetting to factory settings 141
Selection 140
Gas mixture 72
Gas protective equipment 53
Gas solenoid valves 27
Gas supply lines
Securing 151
Gas system
Corrosion 276
Gases
Properties of compressed gases 53
Safe working practices 53
Turning off 134
Turning on 124

H

Halogen
Physical hazards 47
Halogen filter
Cartridge exchange 210
Location 17
Maintenance 209
Purpose 27

A0409LPX

Halogen gas cylinders
Exchange 158
Handling 53
Halogen injection (HI) 33, 34, 294
Manual HI 170
Halogen source 18, 294
Handheld keypad 18, 98, 114, 294
Hazard warning labels 61
Hazardous energy sources 149
Head valve
Gas system 27
Heating voltage
Thyratron 23
Helium 74
HI/PGR mode 37
High reflecting (HR) mirror 21
High voltage / electric energy
Physical hazards 46
Protection against hazards 52
High voltage circuit 22
Housing covers
Handling 153
HV CONST 294
HV Constant mode 33
Selection 137
HV key 119
HV power supply module 12, 23
Connection 93
Hydrogen chloride 73

I

Inert gas cylinder
Exchange 163
Information separator
Use of in remote commands 219
Interlock 31, 294
Overload 272
Remote 273
Temp.Res. 273
Ventilation 274
Internal triggering 31
Ionizing radiation
Radiation limit 46

K

Key switch 60, 113
Krypton 73

L

Labels 61

Laser
Definition 6
Start 130
Stop 132
Laser assembly
Definition 6
Laser beam parameters 68
Laser control system 24
Laser device
Dimensions 70
Does not start 277
Shut down 133
Start-up 128
Laser gases
New fill 168
Turning off 134
Laser head 12, 13
Laser light
Characteristics 10
Laser Logbook 147
Laser optics
Maintenance 175
Laser parameters 236
Laser radiation 45
Warning lamp 114
Laser resonator
Alignment 201
Configuration 21
Laser safety classification 3
Laser Safety Officer 41, 49
Laser tube 19
Laser unit
Definition 6
Use of protective eyewear 130
LCD-display 116
Leak test (gas line)
Overpressure leak tightness 166
Vacuum leak tightness 165
Leaks 54
Light amplification 10
Line ON light 113
Local software 295
Lockout / tagout
Procedure 149
Requirements of lockout / tagout device 150
Low beam energy 207
Low light error 283
Low light function 231

M

Main switch 113
Lockout 150

A0409LPX

Mains power supply
Connection 101
Maintenance area 87
Maintenance schedule 148
Manual halogen injection 170
Meaning of expression
Start laser 6
Start laser device 6
Mechanical safety features 59
MENU RESET key 120
MENU SEL key 120
Mirror mount
Disassembly 192
Reassembly 193
Mirrors
Coated surface 175
Exchange 187, 191
Missing pulses 207
MODE key 119
Modules of laser device 12

N

Name
Definition of name in descriptions 219
Neon 74
New fill 125, 168, 295
NEW FILL key 122, 169
NEW FILL mode 36
Nitrogen 30, 74
No Gas Replacement (NGR) mode 35
No trigger signal 207, 275
NovaTube
Functional description 19
Numerical input keys
Handheld keypad 117

O

OFF mode 36
OFF, WAIT mode 36
ON mode 36
Operating elements 112
Operating modes
OPMODE=CAPACITY RESET 231
OPMODE=CONT 228
OPMODE=ENERGY CAL 232
OPMODE=FLUSH LINE 230
OPMODE=FLUSHING 228
OPMODE=HI 229
OPMODE=LL OFF 231
OPMODE=MANUAL FILL INERT 229
OPMODE=NEW FILL 225

A0409LPX

OPMODE=OFF 223
OPMODE=ON 224
OPMODE=PASSIVATION FILL 226
OPMODE=PGR 229
OPMODE=PURGE LINE 230
OPMODE=PURGE RESERVOIR 226
OPMODE=SAFETY FILL 227
OPMODE=SKIP 225
OPMODE=TRANSPORT FILL 227
Setting restrictions 222, 238
Software 221
Transition diagram 35
Operating panel 112
Operating sequences 123
Operating temperature
Laser tube 20
OPMODE
Definition 295
Optic cleaning 185
Optical safety guidelines 50
Optics coatings 175
Output coupler
Function 21
Location 16
Output energy setting 138
OVERLOAD message 208
Ozone 30
Physical hazards 48
Protection against 54

P

Parameter commands 236
ACCU 253
BUFFER 244
CAP.LEFT 253
CAP.SET 253
COD 248
COUNTER 246
COUNTS 243
EGY 240
EGY RANGE 240
FILTER 249
FILTER CONTAMINATION 249
GASMODE 243
HALOGEN 244
HV 241
INERT 244
INTERLOCK 250
LEAKRATE 254
MENU 245
MODE 239
POWER STABILIZATION ACHIEVED 250

A0409LPX

PRESSURE 251
PULSE DIFF 251
RARE 244
REPRATE 242
RESERVOIR TEMP 252
ROOMTEMP 255
TEMP 254
TEMP CONTROL 252
TIMEOUT 247
TOTALCOUNTER 246
TRIGGER 241
TYPE OF LASER 255
VERSION 255
Parameter polling restrictions 238
Partial gas replacement 34, 296
Partial pressure 296
Passivation 19, 296
Peaking capacitors 22, 296
Periodic maintenance schedule 148
Personal Protective Equipment (PPE) 41
Protective eyewear 48
Protective gloves 54
Personnel
Selection and qualification 42
PGR mode 33
Physical dimensions 70
Plane-parallel resonator 21
Polling commands
Description 217
Polychlorinated biphenyl (PCB) 60
PR mirror 21
Pre-ionization 19
Premix 296
PRESET ENERGY TOO HIGH 138
Pressure regulator
Operation 125, 160, 165, 177
Requirements 84
Pressure relief valve
Gas system 27
Pressure sensor
Gas system 27
Pressure switch
Purge gas system 30
Pressure vessel
Safety features 58
Safety precautions 55
Protective equipment
Gas 53
Protective eyewear 65, 130
Pulse counter functions 142
Pulse energy 32

A0409LPX

Purge gas
Purpose 30
Supply system 30
Turning off 134
Purge gas lines 156
Purge laser tube 171
PURGE LINE key 122
PURGE RESERVOIR key 122, 171

Q

Question mark
Meaning in commands 219

R

Radiation safety features 55
Radiation warning lamp 114
Rare gas cylinder
Exchange 163
Rear service panel
Handling 153
Location 13
Remote control 297
Remote interlock socket 78
Remote interlock switches 31
Remote software
Parameter commands 236
Re-passivate laser tube 19, 173
Repetition rate 9, 297
Setting 136
Reply codes 220
REPRATE key 119
Residual energy
Dissipation 151
Resonator
Alignment procedure 201
Configuration 21
Function 297
Restoring laser device to service
After lockout / tagout 152
Right side cover
Location 14
RS232 specifications 79
RUN STOP key 118
Running modes
Energy Constant mode 32
HV Constant mode 33
Selection 137

A0409LPX

S

Safety
Organizational measures 41
Safety chain to secure working area 52
Safety compliance 39
Safety information 3
Safety symbols in this manual 5
Safety-relevant labels 61
Safety fill 297
Self-firing 275
Serial interface 79
Setting
Definition of setting in descriptions 219
Setting commands
Description 217
Short circuit plug 99
Shut down laser device 133
Side cover
Handling 154
Signal line connections 85
Signal words
Usage in manual 4
Single-phase consumers 25
Skin safety guidelines 51
SlideValve 176, 297
Software
Operating modes (OPMODEs) 221
Software version 217
Solenoid valve
Gas system 25
Special characters
Use of in commands 219
Specific safety aspects 44
Start-up laser device 128
Static gas lifetime 293
Status codes 234
Output and display 37
Stimulated emission 10
Stop laser 132
Storage capacitors 22, 23
Symbols in this manual 5
Sync. Out Signal 80

T

Temperature sensor
Cooling system 29
Temporal mode 9
Three-phase consumers 25
Threshold voltage 298

A0409LPX

Thyratron 298
Description 23
Heating voltages 23, 206
Location of adjustment panel 15
Maintenance 205
Top cover
Handling 154
Location 13
Total counter
Reading 142
Toxic gases
Safe working practices 53
Toxic hazards 40, 42, 53
Trademarks 3
Transport locks 90
Transportation fill 145, 214
TRIGGER INT EXT key 118
Trigger pulse 298
Triggering modes 31
Changing 135
Troubleshooting
Interlocks 272
Warnings and error messages 258
Tube window
Cleaning 182
Exchange 176
Turn off gases 134
Turn on gases 124
Typographic conventions in this manual 2

U

Ultra-violet radiation
Physical hazards 45
Protection against 48
User counter
Reading 143
Resetting 143
User interface
Laser control system 24

V

Vacuum pump
Connection 104
Electrical connection 97
Purpose 12, 27
Vacuum valve 27
Ventilating systems 54
Visible alignment laser 203

A0409LPX

W

Warm-up phase 129
Warning and error messages 258
- Duty Cycle Exceeded 259
- Energy Cal. Error 259
- Error Temperature Measurement 260
- Fatal Error, COM-Datalink 260
- Fatal Error, LWL-Datalink 260
- Fatal Error, Watchdog 263
- Fluorine Valve Not Opened 263
- Halogen Pressure Too High 263
- HI in Prep 263
- Inert Valve Closed 264
- Interlock XXX 264
- Leak!-Check Windows 264
- Low Light 265
- Low Pressure 265
- New Gas Fill Needed 265
- No Capacity Left 266
- No Gas Flow 266
- No Vacuum 267, 268
- Not Available 268
- OFF:41 268
- ON:40 268
- ON:41 269
- Polling 269
- Preset Energy too High 269
- RAM Check Error 270
- Timeout 270
- Warm-up 8min 271
- Wrong Pressure 271

Warning lights 60
Watchdog 30, 298
Water line installation 90
Wavelengths of excimer lasers 9
Window mount
- Disassembly 183
- Reassembly 187

Windows 21, 53, 298
- Cleaning 182
- Coated surface 175
- Exchange 176

X

X character in descriptions 219
Xenon 73

A0409LPX

A0409LPX